CL5000 Series

Service Manual

(English)

Rev. 2005. 12.21

Table of Contents

1. Proper Operation 5
    1.1 Introduction 5
    1.2 Model and Specificationl 6
    1.3 Environmental Conditions & Safety 7
    1.4 Leveling and Footer Location 8
    1.5 Power Outlet and Requirements 10
2. Classification 12
    2.1 Scale Overview 12
    2.2 Display and Indicators 13
    2.3 Printer 14
    2.4 Commuication 15
    2.5 Key Pad 16
3. Getting Started 17
    3.1 Sealing Method 17
    3.2 Installation of the Label Roll 17
    3.3. Turning Power On/Off 19
    3.4 Program Menu and Tree 20
        3.4.1 How to access PROGRAM MODE 20
        3.4.2. Program Menu Tree 21
        3.4.3 Calibration Menu Tree 23
4. Calibration Mode 24
    4.1 Calibration 24
        4.1.1. Span Calibration (Menu Code 8110) 25
        4.1.2 Span/Zero Fine Adjust (Menu Code 8120) 26
        4.1.3 Capacity & Units (Menu Code 8130) 28
        4.1.4 Gravity Constant (Menu Code 8140) 29
        4.1.5 Percent Calibration (Menu Code 8150) 30
        4.1.6 Linearity Adjust (Menu Code 8160) 31
        4.1.7 Zero & Tare Setting (Menu Code 8170) 32
    4.2 Factory Setting (Menu Code 8180) 33
        4.2.3 A/D Initialize (Menu Code 8183) 33
        4.2.4 Linearity Fine Adjust (Menu Code 8184) 34
        4.3.1 Clear Report (Menu Code 8211) 35
        4.3.2 Clear All PLU (Menu Code 8212) 35
        4.3.3 Clear All Table (Menu Code 8213) 35
        4.3.4 Flash All Clear (Menu Code 8214) 35
        4.5.1 Print Mode (Menu Code 8310) 37

4.5.2 Label/Ticket Size (Menu Code 8320) 37
4.5.3 Sensor Calibration (Menu Code 8330) 37
4.5.4 Sensor & Motor (Menu Code 8340) 38
4.5.5 Print Intensity (Menu Code 8350) 38
4.5.6 Adjust Feed Length (Menu Code 8360) 38
4.5.7 Label Pre-print (Menu Code 8370) 38
4.5.8 Printer Initialize (Menu Code 8380) 38
4.6 Network Options 39
5.6.1 Enable Interface (Menu Code 8410) 39
4.7 Self Test 39
4.7.1 Display Test (Menu Code 8510) 39
4.7.2 A/D Test (Menu Code 8520) 39
4.7.3 Keyboard Test (Menu Code 8530) 40
4.7.4 Chess Print (Menu Code 8540) 41
4.7.5 Printer Sensor Test (Menu Code 8550) 41
4.7.6 Memory Information (Menu Code 8560) 42
4.7.7 Firmware Version (Menu Code 8570) 42
5. Parameter 43
5.1 Factory Setting (para 800~999) 43
5.2 Dealer Setting (para 500~799) 51
6. Servicing & Parts Replacement 64
6.1 Platform Safety Overload Adjustment 65
6.2 Removing the Upper Case 66
6.3 Main board Replacement 68
6.4 Power Supply Replacement 69
6.5 Load Cell & AD Converter Replacement 70
6.6 Print Assembly Replacement 71
6.7 Display Replacement 72
6.8 Keyboard Replacement A,B(with/without breaking sealing) 73
7. Installing Options 74
7.1 Installing Ethernet Card 74
7.2 Installing Wireless Lan Card 75
7.3 Installing Memory Expension Card 75
8. Update 76
8.1. F/W update 76
9. Schematic & Diagrams 78
9.1 System Block Diagram 78
9.2 Connection Diagram 79
9.3 I/O Pin Connection 80

9.4 Main PCB 81
9.5 A/D PCB 85
9.6 Display PCB 86
9.7 I/O PCB 91
9.8 Printer I/O PCB 92
9.9 Slot PCB 93
9.10 Extension Memory PCB 94
9.11 Wired LAN PCB 95
9.12 Wireless LAN PCB 96
9.13 CF Card PCB 97
10. Exploded Views 98
10.1 Scale Assy 98
10.2 Body Assy 100
10.3 Platform 102
10.3 Main Frame (H-type) 103
10.3 I.O cover 104
10.4 Upper Case 105
10.4 Pole display P-type 106
10.5 Printer Assembly 108
10.6 Printer Header Assemble 109
10.7. Cartridge 110
10.8 Tray assembly (H-type) 111
10.9 Lan card 113
11. Part List 114
11.1 Electronic 114
11.2 Mechnical 114
12. Revision 115

1. Proper Operation

1.1 Introduction

Thank you for purchasing the CAS CL5000 price computing printer scale. We have designed this equipment with advanced features, high quality construction, and user-friendly menu driven programming. We are confident that you will find the CAS CL5000 scale will meet all of your most demanding needs.

Sales data is easily acquired through many of the available reports which are quickly accessible through the on-screen menus. Also available: High speed printer (4 inch per second), 53 preset keys (106 using the SHIFT key or double click) per department, and several operation modes that enable you to control & access to the scale.

For larger operations, CL5000 has in-store network that can link-up to 32 scales. RS-232 port, ethernet port, and wireless connection enable to export and import program data for time-save mangement. On-time operation possible because of PLU and all other data files are kept locally in each scale' s memory bank; the scale' s speed is the same as a stand-alone unit in a network.

The CL5000 can use with both ticket and label. Auto measuring system enhances use any types of roll paper. (Just entering a label' s length and width dimensions, you can use practically any roll) Also cartridge loading mechanism helps to refill the label roll easyly. Also you can print logos, templates, Nutri-Facts panels, ingredient messages, advertisement lines, and more to promots your store.

Remember, for proper installation and maintenance please read the CL5000 Manual before use. A wide variety of supplies, accessories, and expansion options are available through CAS Corporation for whatever your new and increasing demands may require

The CL5000 also comes with the SP-2 software package. This software runs on any PC using the 95/98/2000/XP Windows OS. You can design your own label formats on your computer screen and save them to your hard drive. With this percise interface, the labels you see on-screen appear exactly on the printer. You can also manage all of the CL5000' s programs and options like pricing, PLU programming, etc. You can upload data from a CL5000 or download data. This is ideal solution for an emergency scale backup system. All this and many more features are packed into the SP-2 software package. SP-2 software package enhances your business next level.

1.2 Model and Specificationl

Model	CL5000 Series			
Capacity	15Kg	30Kg	30 lb	60 lb
Interval	2g/5g	5g/10g	0.005lb/0.01lb	0.01b/0.02lb
Max Tare	-5.998Kg	-9.995Kg	-9.995lb	-29.99lb
Display	24 digit VFD + Graphic LCD			
	Tare: 4 digit Weight: 5 digit Unit Price: 6 digit Total Price : 6 digit		Weight: 5 digit Unit Price: 6 digit Total Price : 7 digit	
Zero Pass Range	1~50% (default 10%)			
Re-Zero Range	1~50% (default 2%)			
Overload Range	Max Capa. ~ Max Capa. + 255d (default Max+9d)			
A/D Conversion Rate	Approx. 8/sec			
Measurement type	Load cell			
Platter type	SUS			
Key	B-Type	PLU Key : 48, Function Key: 36	P-Type	PLU Key : 72, Function Key: 36
Speed Key		PLU Key : 96	R-Type	PLU Key : 144

Data Table	PLU	1~99999	3000
	Ingredient 510 Char	1~999	999
	user defined Barcode Format	1~99	99
	Department	1~99	99
	Tax Type	1~9	9
	Group	1~99	99
	Clerk	1~95	99
	Discount	-	99
	Origin	1~500	500
	Traceability	1~99	99
	Slaughter House	1~99	99
	Cutting Hall	1~99	99
	Traceability Country	1~99	99
	Label Format	Default :12, User:20	
	Bitmap	14	14
	Customer	1~99	99
	Non Weight PLU Unit Type	8	8
	Scroll Message	1~9	9
	Pay Type	0~8	8
	Sales Message	1~99	99
	Nutrifact	1~500	500
	Tare Table	1~99	99
	Currency	1~4	4

Report	X1/X2, Z1/Z2, Scale, PLU, Misc. PLU, Group, Department, Hourly, Clerk Report
Printing Resolution	202 dpi
Label Size	Width: 40mm ~ 60mm, Length: 30mm ~ 120mm
Barcode Type	UPC, EAN13, EAN13A5, I2OF5, CODE128, CODE39, CODE93, CODABAR, MSI/PLESSEY, IATA2OF5
Font	Offer varoius sizes of label format, e.g Small, Middle, Large Size, and on the label format, also offers varioous types of fonts, such as Italic,Bold,Underline,Throgh Line, Double through line, Reverse,shadow, outline etc.
Printer Type	Direct Thermal Print

Dimensions	B-Type	408 x 432 x 173 mm	Tray : 380 x 244 mm
	P-Type	408 x 493 x 542 mm	
	R-Type	408 x 493 x 607 mm	

1.3 Environmental Conditions & Safety

1) Please avoid the following hostile conditions

- Temperatures below or exceeding:
  -10º C ~ 40º C (14º F ~ 104º F)
- Excessive vibration
- Wind or fans functioning in direct contact with weighing platform.
- Direct sunlight
- High humidity
- Ungrounded electrical outlet
- Unstable or flimsy surface
- Shared electrical outlet
- Dust or dirt
- Poor ventilation

2) Environmental Protection

The scale should be installed in a dry and liquid free environment. When the scale is installed in a high humidity or wet-type environment, be sure to avoid spilling or spraying directly on any surface of the scale.

3) Personal Safety

It is very important to be aware of personal safety whenever maintaining or operating this equipment. We have tried to place warning labels and other indicators at the actual location on the equipment where the danger is most likely to occur. Warnings and cautions that are necessary for the safe operation of the scale are contained in this manual. Please, make sure to read carefully ALL warnings and cautions before operating the scale.

4) Observe the following safety precautions

- Shut the scale **OFF** and unplug the scale whenever you are changing the label roll or whenever working in the printer bay.
- The outlet that the scale is plugged into, should be properly grounded.
- Whenever connecting or disconnecting **ANY** cables from the scale, be sure to hold the cables by the end connector. Failure to do so may cause a short circuit.
- Maintain a static-free work area.
- The outlet used must have the proper voltage ratings.

1.4 Leveling and Footer Location

1) Location

This scale must be placed on a flat and stable surface. Please keep the scale away from the direct path of oscillating fans, ventilation systems, or strong drafts as these air disturbances can be picked-up by the scale’ s very sensitive weighing platform and may cause incorrect weight readings.

1.1) General Footer

Factory setting (Footer location is following picture)

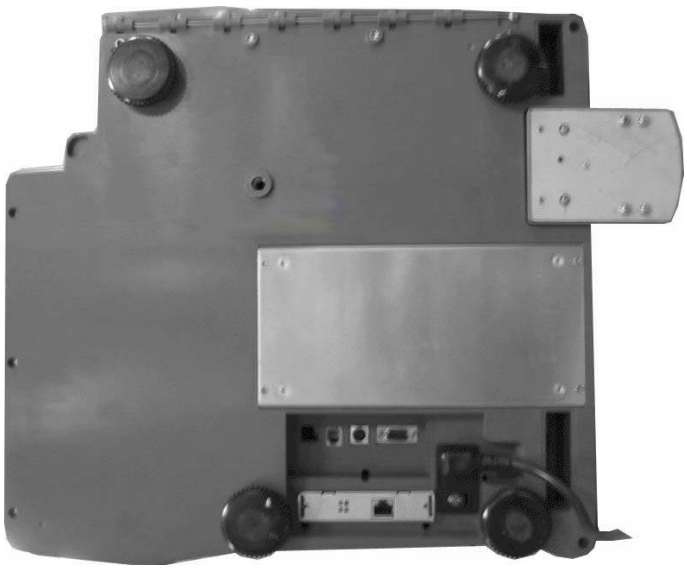

1.2) Short Case Footer

Unscrow the footer and place in center hole for narrow place.

2) Leveling

If the scale is not properly leveled, please adjust the 4 adjustable legs at the bottom of the scale. Turn the legs clockwise or counterclockwise so as to center the bubble of the leveling gauge inside the indicated circle. Turning the adjustable legs counter-clockwise (viewed from top of scale) will lower that part of the scale. Turning the adjustable legs clockwise (viewed from top of scale) will raise that part of the scale. (See Fig.)

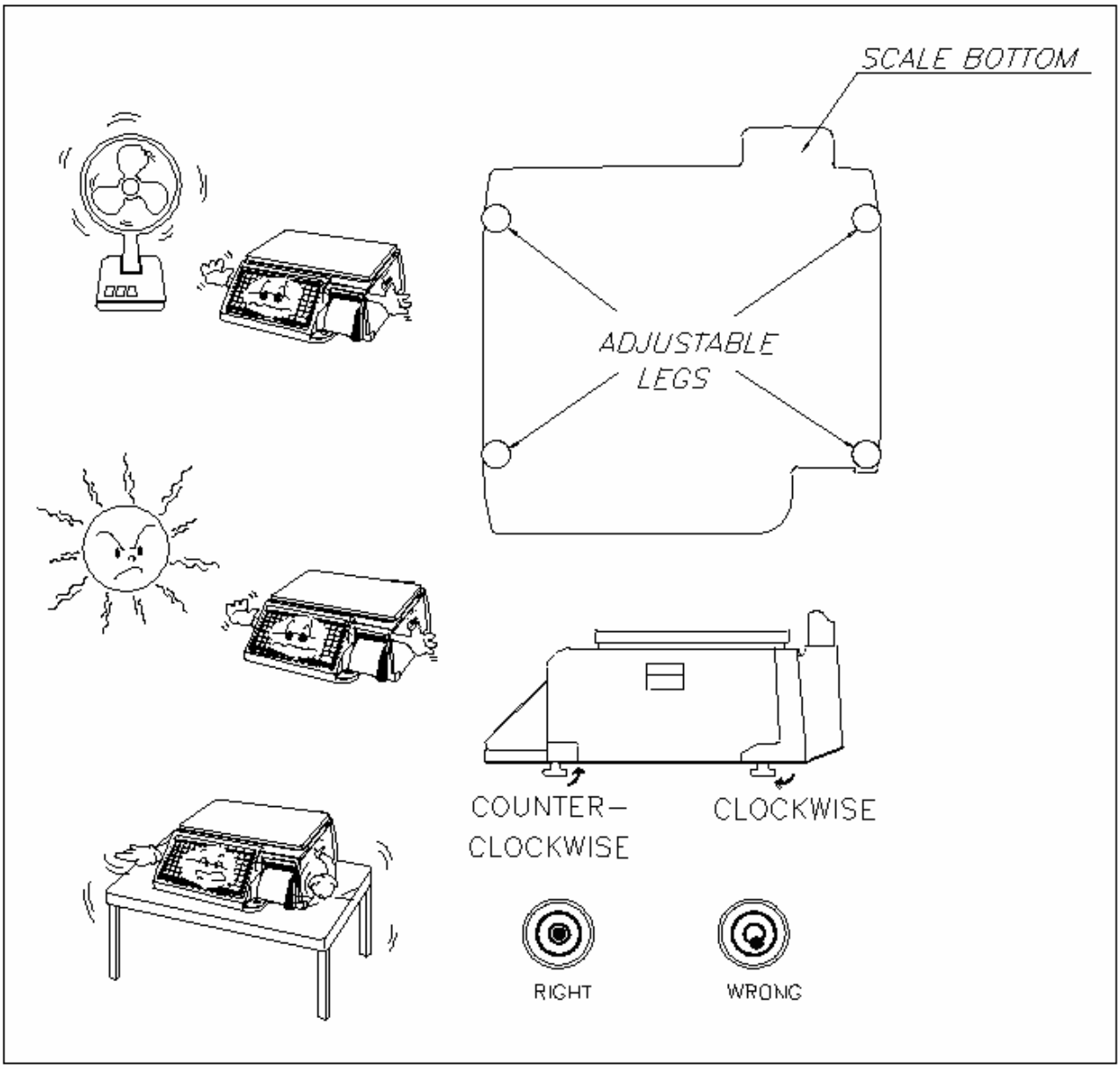

1.5 Power Outlet and Requirements

Power Source : AC 100~240V, 50/60Hz, 1.5A

Power consumption : Max 90W

CL5000's outlet is on bottom of scale.

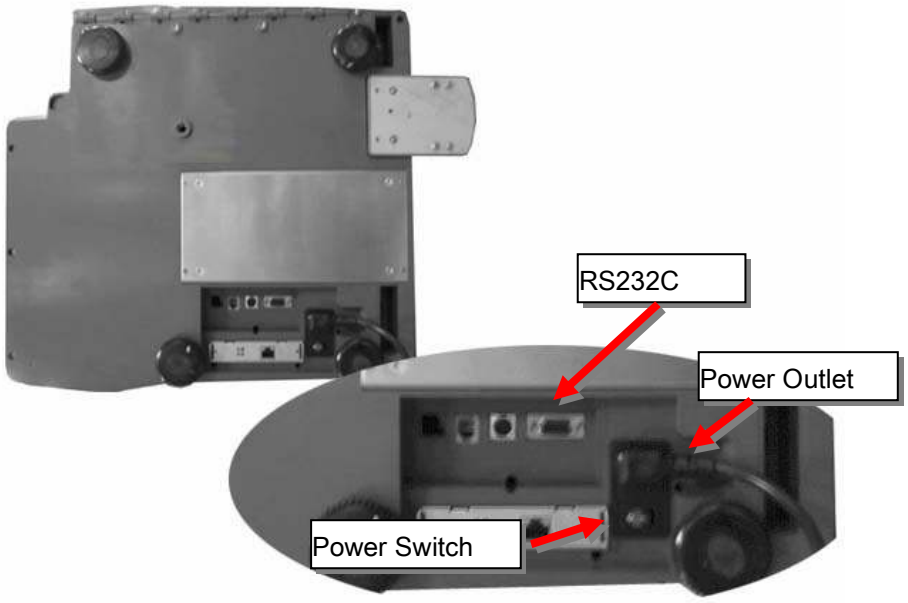

1) The CL5000 is designed to be used almost anywhere in the world! Like the many appliances of today, the CL5000 is designed with an automatically switching power supply. This allows operation when connected to an AC source from 100V to 240V at 50/60Hz with 5% tolerance.

NOTE: Please make sure that the power lines used for the CL5000 are dedicated lines with
No high-noise devices (such as compressors, motors, etc) running on it.
Also, make sure that the wiring to the electrical socket is correct.
If you are uncertain as to the state of your work' electrical lines,
please contact a certified electrician.

2) Once you are sure as to the safety of the electrical line, make sure to ONLY plug the scale into a 3-prong outlet. The third prong is a safety ground and an electrician should properly wire this if it is not correct or if you are unsure. Failure to this CAN result in electrical shock from use of this or any electronic scale.

3) Do not use any 3-prong to 2-prong adapters or break-off the third prong from the CLP power cord. The third prong is necessary and must be properly connected.

4) If you have any problems or questions regarding this matter, make sure to contact the CAS Service Department.

2. Classification

2.1 Scale Overview

CL5000 has 3 differrnt type Standard Type, Pole Type(R,P), Hanging Type.

- Standard Type

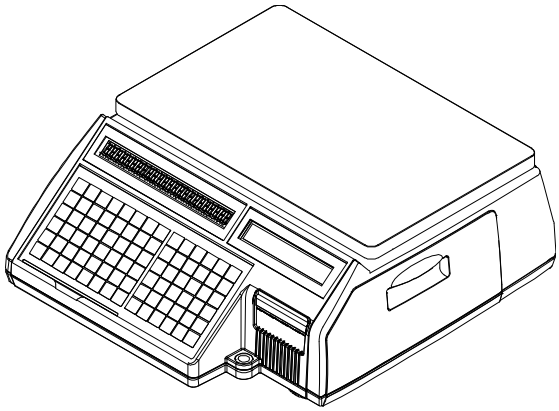

- Pole Type P

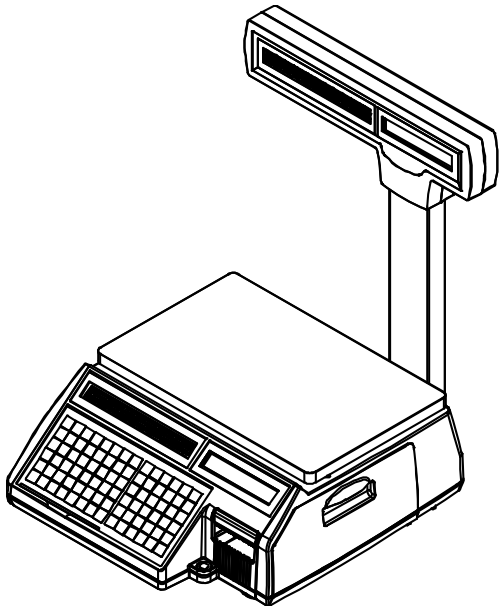

- Pole Type R

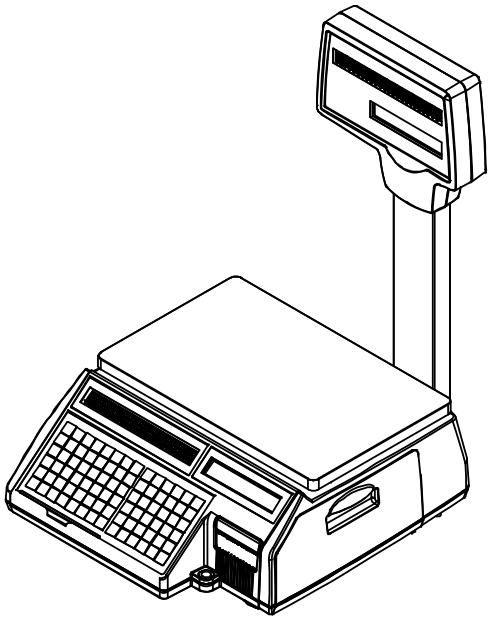

- Hanging Type H

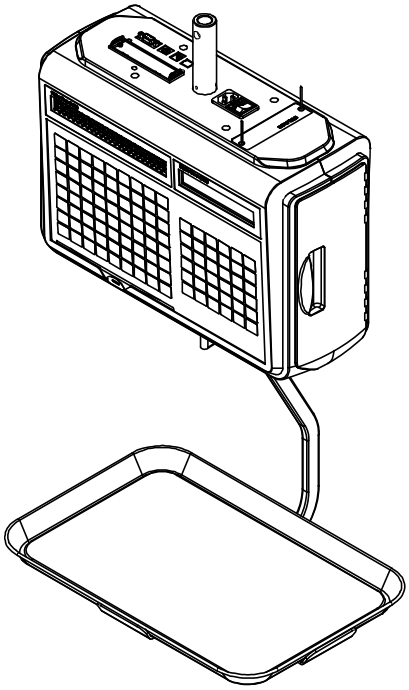

2.2 Display and Indicators

There is VFD, LCD(202x64) display on CL5000. VFD display indicates program tare, weight, unit price, total price. Underbar inicates stable, net, zero, auto, save, prepack, D/C, shift, data transfer.

LCD display shows menu massages for program mode.

- **Type-I: 5/8/9**

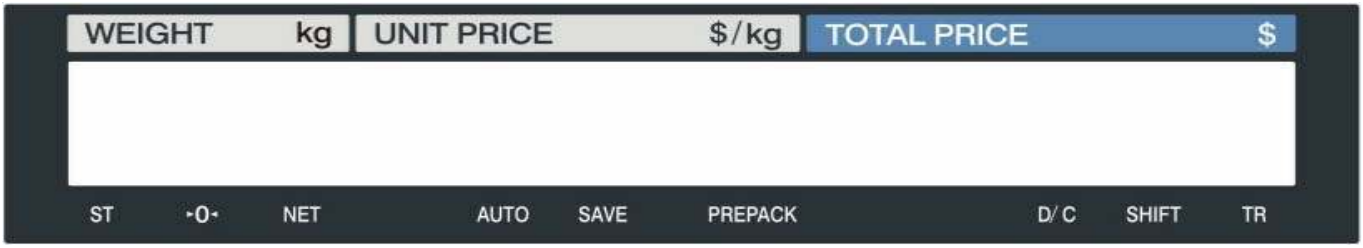

- **Type-II : 4/5/6/6**

- **Indicators**

SYMBOLS	DESCRIPTION
ST (▾)	Stable weight indicator
NET (▾)	Net weight indicator
□0□	Zero weight indicator
AUTO	Print Mode indicator
SAVE	Auto clearing status indicator
PREPACK	Auto clearing status indicator
DC (▾)	Discount status indicator
SHIFT (▾)	Speed key shift status indicator
TR	Data transmission status indicator

2.3 Printer

•Cartridge type print mechanism

•High quality ROHM printer head (50km/5x10^7pulses)
•Improved a rotating force by using 2 independent motors
•Large compartment for 120mm paper roll
•High speed at 100 mm/sec.
•5 speed ranges for paper roll quality adjustment

•Supports Paper
  •Labels,
  •Continuous strip labels,
  •Lineless paper

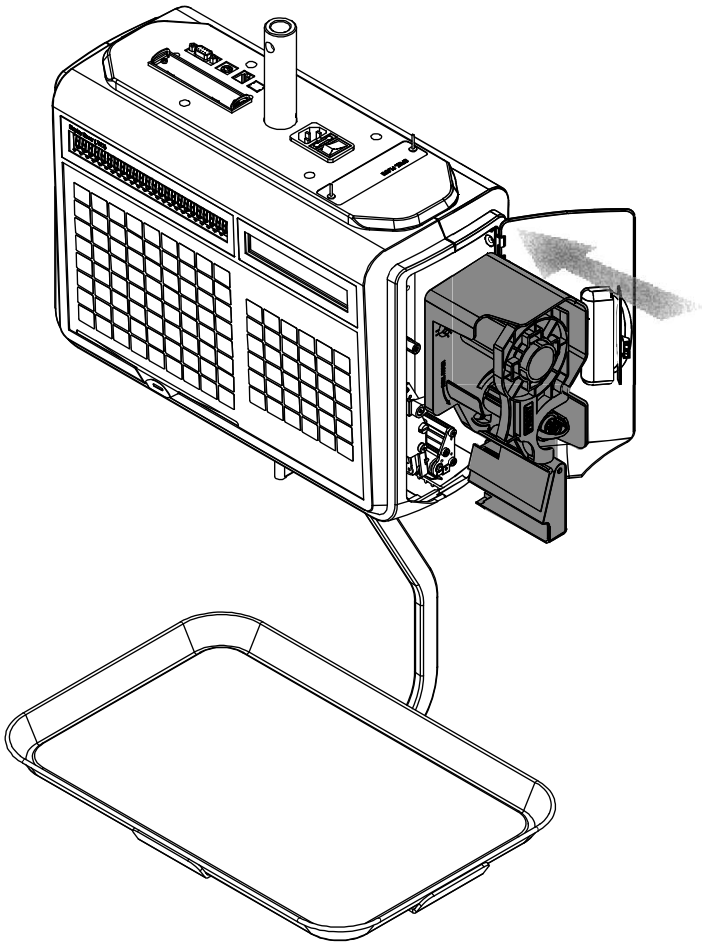

2.4 Commuication

- Standard
  - ① RS232
  - ② P/S 2
  - ③ Cash Drawer

- Options
  - ④ Ethernet cartrige
  - ⑤ Wireless Ethernet cartrige

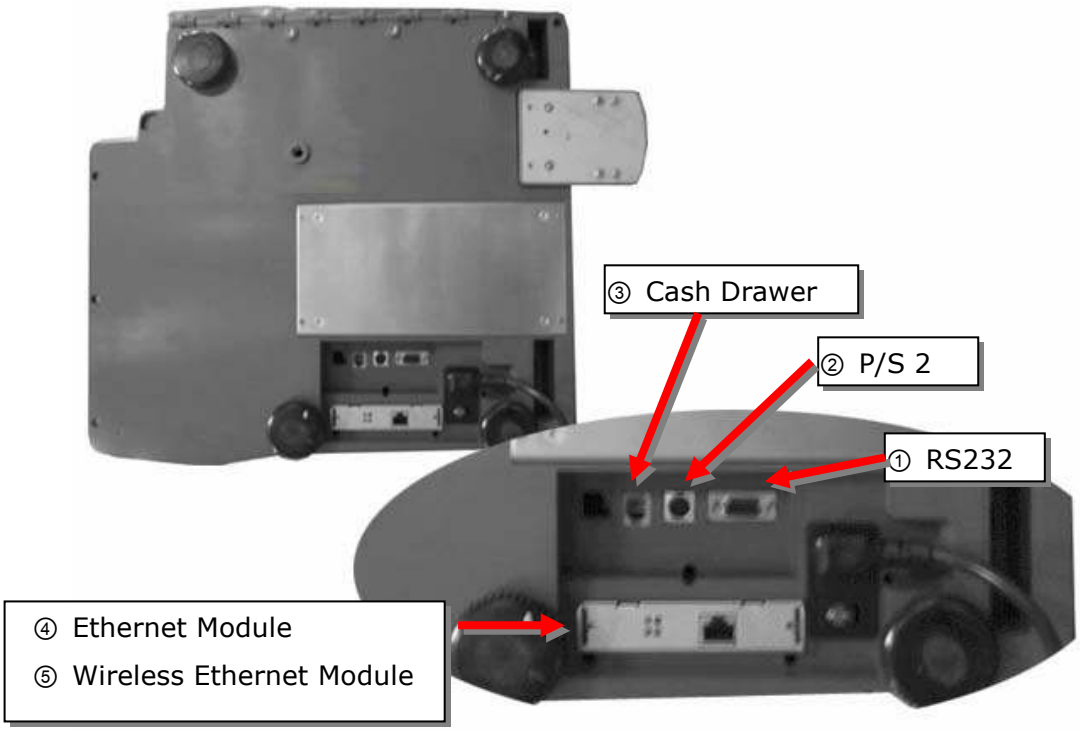

2.5 Key Pad

Key pad is like following picture (This may change depands on contury)

- Standard Type Keypad

- Pole Type Keypad

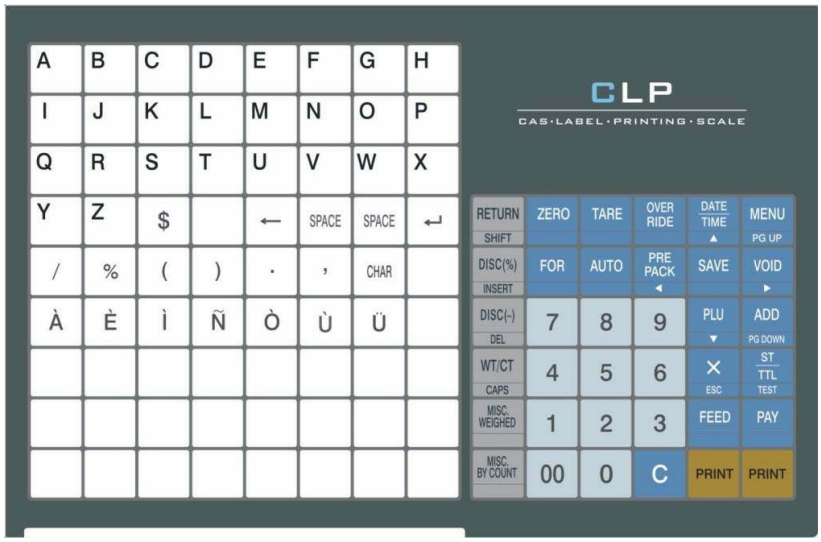

- Hanging Type Keypad

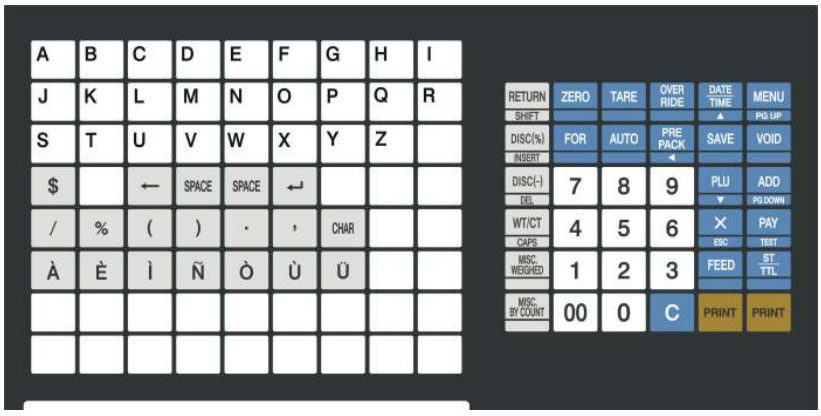

* Hot key and Undifine key setting reference Menu **code 1880**

3. Getting Started

3.1 Sealing Method

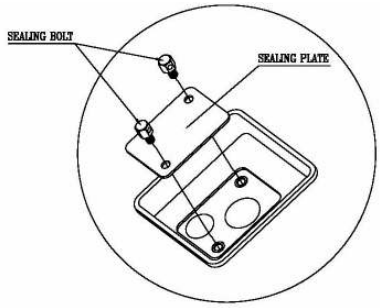

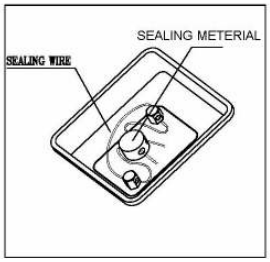

3.2 Installation of the Label Roll

- **Label Specifications**

Outer diameter of roll : 100mm
Inner diameter of roll : 40mm
Width of receipt roll : 40, 50, 60mm
Width of label roll : 60mm(MAX)

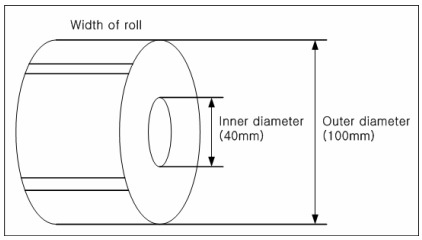

- **Print Area**

Width of label : 60mm(MAX)
Length of label : 120mm(MAX)

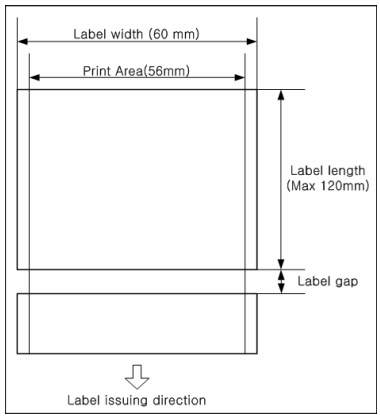

To install the label roll at ANY time you must follow the directions in this section:

1) Press the **ON/OFF** key and make sure that the display is completely off. Open the printer' s side-access panel. (See fig.1)

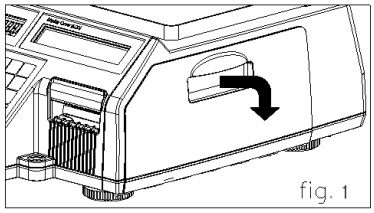

2) Lift up TPH lever as fig 2.

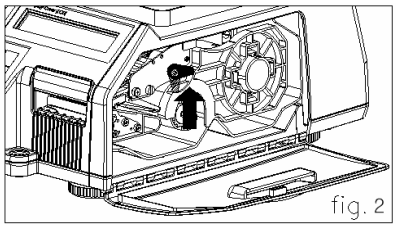

3) Remove cartridge as fig. 3.

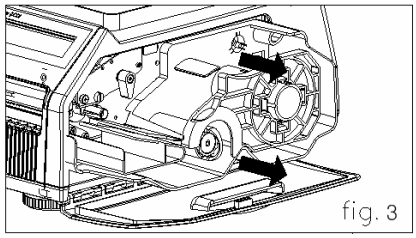

4) Remove Pick-Up Spool assembley and paper guide from the cartridge as fig. 4.

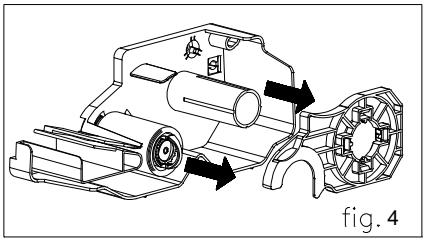

5) Place the label in the scale as fig. 5

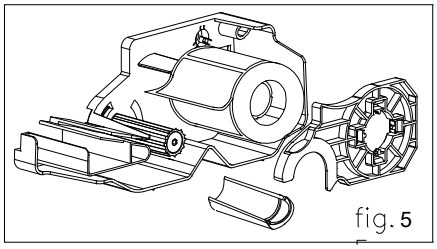

6) Press the FEED key.

NOTE: For auto label calibration press FEED key two or three times

*** If label position is not correct, you have to check the followings:**

a. Label size (Label setting menu)

b. Feed Adjustment (Feed adjustment menu)

c. Senseor calibration (Sensor Calibration menu)

3.3. Turning Power On/Off

When you turn on scale, display will show 9 ~ 0 for self testing.

During each number and buzzer sound is processing following procedure.

Buzzer On Initial Port,Timer,UART(AD),CPLD,PrinterDriver,RTC
Printer Driver Start
Start Timer
Buzzer Off Flash Check,Set UART (AD) Baudrate
Initial LCD,Display,Key,PS2
VFD "999999" Init Serial, Check Caption Data
VFD "888888" Init ADM,Check Memory Map
VFD "777777" Check Network Parameter,
Load Global Parameter,Load Service Type
VFD "666666" Check Network Flag,CAL mode
VFD "555555" -
VFD "444444" Init Ethernet Module
VFD "333333" Init PLU_Data
VFD "222222" Key Error Check -> Buz,Buz : Command Queue Init
VFD "111111" Load Label Default, CheckAdInitStatus
VFD "000000" Check Password,Logging BOOTTIME,NETSTART

3.4 Program Menu and Tree

3.4.1 How to access PROGRAM MODE

You can see the Program Menu screen by pressing the MENU key.

The 2 numbers at top left (1/3) indicate the number of pages or screens. The number to the left of the slash is the current page or screen number and the number to the right of the slash indicates the total number of pages or screens. You can use the **Page Up** and **Page Down** keys to navigate from page to page, or you can use the Arrow keys to go through each page 1 line at a time.

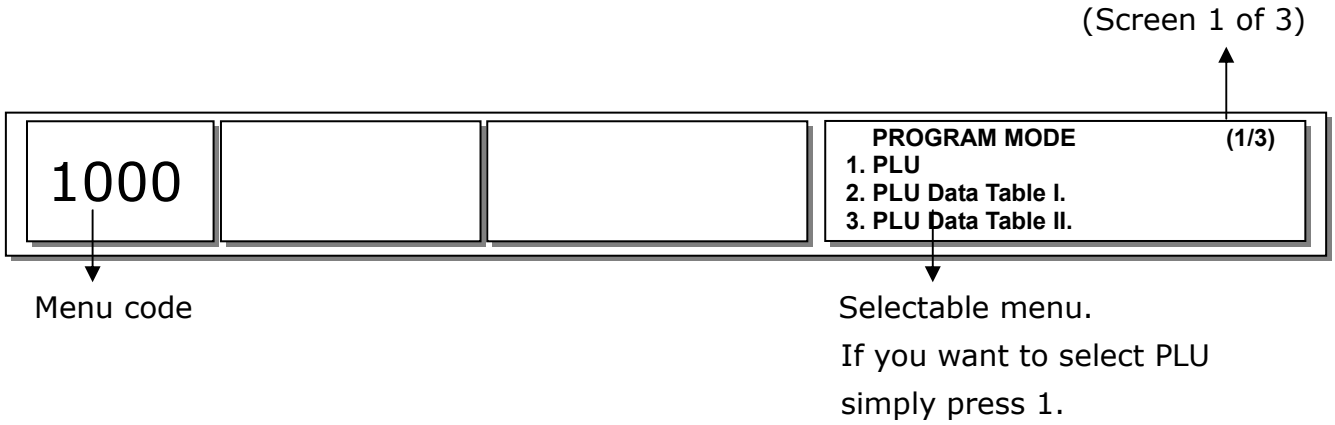

If you press "**Pg Dn**" key, you can see other menu screens as below.

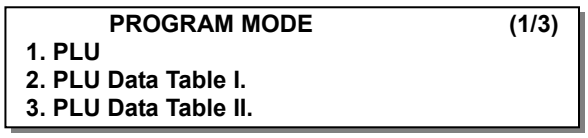

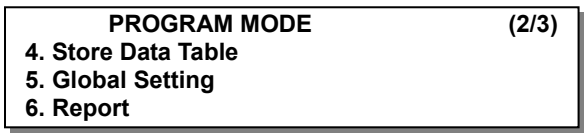

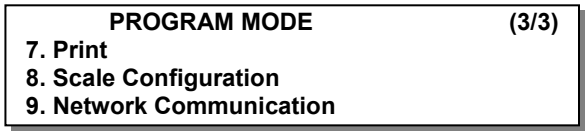

3.4.2. Program Menu Tree

CODE	Menu	CODE	Sub Menu	CODE	Sub Menu		
1100	PLU	1110	Change Price				
		1120	New/Edit	1120			
		1130	Discount	1131	New/Edit		
				1132	List		
				1133	Delete	1137	Delete by PLU(DC)
						1138	Delete by Dept(DC)
						1139	Delete All
		1140	Management	1141	Copy		
				1142	Delete	1147	Delete by PLU No.
						1148	Delete by Dept. No.
						1149	Delete All
				1143	Move		
				1144	Inhibit		
				1145	PLU Sale Count		
		1150	List				
		1160	Speed Key				
		1170	Sample Printing				
1200	PLU Table1	1210	Department				
		1220	Group				
		1230	Tax Rate				
		1240	Sales Message				
		1250	Origin				
		1260	Barcode				
		1270	Tare				
		1280	Unit Symbol				
1300	PLU Table2	1310	Ingredient				
		1320	Nutrition Facts				
		1330	Traceability				
		1340	Country				
		1350	Slaughter House				
		1360	Cutting Hall				
1400	Store Data Table	1410	Store				
		1420	Customer				
		1430	Scroll Message	1431	Configuration		
				1432	Edit Scroll Message		
				1433	List Scroll Message		
		1440	Currency				
1500	Global Setting	1510	Label Format				
		1520	Barcode				
		1530	Discount	1531	Priority Setting		
				1532	Weight Discount		
				1533	Count Discount		
				1534	PCS Discount		
		1540	Tax	1541	Set Global Tax		
				1542	Global Tax No.		

1600	Report	1610	X1 Report	1611	Scale
				1612	PLU
				1613	Misc. PLU
				1614	Group
				1615	Department
				1616	Hourly
				1617	Clerk
		1620	Z1 Report		
		1630	X2 Report	1631	Scale
				1632	PLU
				1633	Misc. PLU
				1634	Group
				1635	Department
				1636	Hourly
				1637	Clerk
		1640	Z2 Report		
		1650	Clear All		
1700	Printing	1710	Print inhibit		
		1720	Markdown		
		1730	H/W Setting	1731	Print Mode
				1732	Label/Ticket Size
				1733	Sensor Calibration
				1734	Motor & Sensor
				1735	Print Intensity
				1736	Adjust Feed Length
				1737	Label Preprint
		1740	Serial Number Format		
		1750	Addup Total		
		1760	Ticket	1761	Select Ticket Item
				1762	Select List Item
1800	Scale Config	1810	Sale Mode		
		1820	Operation Mode		
		1830	Department		
		1840	Date/Time		
		1850	User/Security Configuration	1851	New/Edit User
				1852	Change Password
				1853	List User
				1854	Delete User
				1855	Config Permission
				1856	Clerk Key
		1860	Test	1861	Display
				1862	A/D
				1863	Keypad
				1864	Printer
				1865	Printer Sensor
				1866	Memory Information
				1867	Firmware Version
		1870	Scale Parameter	1871	Display
				1872	Printing Oper
				1873	Sale setup
				1874	Clerk Logout
		1880	Function Key Define		

1900	Communication	1910	Network Setting	1911	Service Type
				1912	DHCP
				1913	IP
				1914	Remote IP
				1915	RS232C
				1916	WLAN Setting
				1917	WLAN Config
		1920	Application		
		1930	Scale Lock/Unlock		
		1940	Check Scale		
		1950	Backup to scale		

3.4.3 Calibration Menu Tree

CODE	Menu	CODE	Sub Menu	CODE	Sub Menu
8100	Calibration	8110	Span Calibration		
		8120	Span/Zero Fine Adjust		
		8130	Capacity & Units		
		8140	Gravity Constant		
		8150	Percent Calibration		
		8160	Linearity Adjust		
		8170	Zero & Tare Setting		
		8180	Factory Setting	8181	Digital Filtering
				8182	A/D Hardware Setting
				8183	A/D Initialize
				8184	Linearity Fine Adjust
8200	System Options	8210	Clear Memory	8211	Clear Report
				8212	Clear All PLU
				8213	Clear All Table
				8214	Flash All Clear
		8220	Scale Type		
8300	Printer Hardware	8310	Print Mode		
		8320	Label/Ticket Size		
		8330	Sensor Calibration		
		8340	Sensor & Motor		
		8350	Printer Intensity		
		8360	Adjust Feed Length		
		8370	Label Pre-print		
		8380	Printer Initialize		
8400	Network Options	8410	Enable Interface		
8500	Self Test	8510	Display Test		
		8520	A/D Test		
		8530	Keyboard Test		
		8540	Printer Test		
		8550	Printer Sensor Test		
		8560	Memory Information		
		8570	Firmware Version		
		8580	Cash Drawer Test		
8600	Parameter Setting	8600	[Parameter Setting Mode]		

4. Calibration Mode

4.1 Calibration

(Calibration MENU -> 1. Calibration)

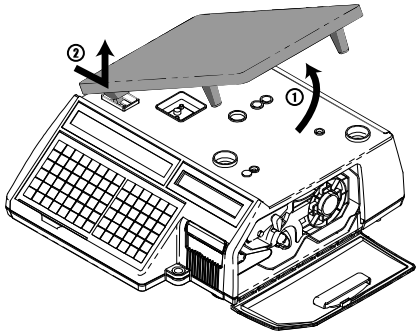

Execute Weight Calibration and A/D related settings

(Access Authorized CAS Tester only)

Open the tray and remove the calibration sealing.

(CAUATION: Lift the tray Right side first and unlock the left side)

Order to access calibration mode:

Insert a stick into the CAL switch. Switch power on, while pushing the CAL button.

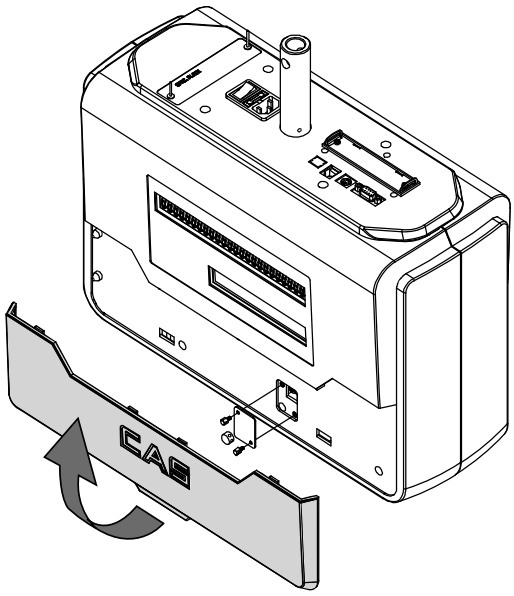

NOTE: For Hanging type: Pull forward the bottom handle to open

First page of Calibration mode

8000	CAL	ModE	**CALIBRATION MODE (1/2)** **1. Calibration** **2. System Options** **3. Printer Hardware**

4.1.1. Span Calibration (Menu Code 8110)

(Calibration MENU -> 1. Calibration -> 1. Span Calibration)

*Requires set of certified weights. (For best result prepare 15kg/6kg (max) weights)
Display shows the amount of weight that you will need.

☐ Select "Span Calibration"

ULoAd	10730	10730	**ZERO CALIBRATION (1/2)** **- Remove all weight.** **- Press PRINT when ready.**

② Empty tray and press "PRINT"

WAit4	10730	10730	**ZERO CALIBRATION (1/2)** **- Remove all weight.** **- Press PRINT when ready.**

While calibrating zero display shows "Wait4" ~ "Wait0" and follow next message for Span Calibration.

LoAd	0	10730	**SPAN CALIBRATION (2/2)** **- Place 15.000 kg on the platter.** **- Press PRINT when ready.**

☐ Put on the Weight for Max. Capacities then press "PRINT"
*Menu 8130 sets the max capacity for calibration.

WAit4	77407	88137	**SPAN CALIBRATION (2/2)** **- Place 15.000 kg on the platter.** **- Press PRINT when ready.**

Display shows "Wait4" ~ "Wait0" then following message

8100	CAL	ModE	**CALIBRATION (1/3)** **1. Span Calibration** **2. Span/Zero Fine Adjust** **3. Capacity & Units**

Error Message

* When tray is unstable during calibration process, following message appear.

WAit0	2776	2776	**Cal Error – Unstable (0x01)** **Press Any Key**

* When calibration weight was too heavy or light, following message will appear.
  - Calibration weight limits can re-adjust by menu 8182 "Cal Zero(Span) Max(Min) Range"

WAit0	1027	1027	**Cal Error – Range Over (0x07)** **Press Any Key**

* When A/D failure is detected during Calibration following message will appear.
  Please check the connector between main board and other controller.

WAit0	1027	1027	**Cal Error – Wrong ADM (0xff)** **Press Any Key**

4.1.2 Span/Zero Fine Adjust (Menu Code 8120)

(Calibration MENU -> 1. Calibration -> 2. Span/Zero Fine Adjust)

This mode is for fine tuning of scale after span Cal. Please put Max weight on the tray and adjust A/D results at 60000, using the cursor key "☐ ☐." and Number key.

☐ Select menu "Span/Zero Fine Adjust"

8120	0	0	**SPAN/ZERO FINE ADJUST (1/1)** **ZERO:[10730]** **SPAN:[88133]**

ⓐ Menu Code ⓑ Internal Value ⓒ External Value (Weight) ⓓ Pure setting value of Zero & Span

* If ⓒ is not set to zero press " ZERO" key. Value ⓓ will update.

☐ Put Max. Capacity weight on the tray

8120	60012	15005	SPAN/ZERO FINE ADJUST (1/1) ZERO:[10730] SPAN:[88133]

③ Use ☐ ☐ key for fine adjust.

* Insert setting value by cursor key (for the fine tune)

"☐" Increases Span value "ⓓ" to decrease Internal value "ⓑ"

"☐" Decreases Span value "ⓓ" to increase External value "ⓑ"

- Internal value 60012 needs to change 60000

  Press [▸] X 12 Times to decrease internal value.

8120	60000	15000	SPAN/ZERO FINE ADJUST (1/1) ZERO:[10730] SPAN:[88145]

* Insert setting value by number key pad

- Set Span value: use curser key to highlight span value.
- Type estimate value using number key then press "TEST" key for results

  # This process may take several times to set 60000.

  During this process Max Capacity weight is needed for best result.

Ex) Input "88145" by keypad and press "TEST" key

8120	60000	15000	SPAN/ZERO FINE ADJUST (1/1) ZERO:[10730] SPAN:[88145]

4.1.3 Capacity & Units (Menu Code 8130)

(Calibration MENU -> 1. Calibration -> 3. Capacity & Units)

Set scale's Weighing unit, capacity, Interval, Cal Unit.

Caution: **Span calibration** must take place after "**Capacity & Units**" setting.

Do not change setting after **Span calibration**.

	Option	Setting Value
1	Weighing Unit	Setting Scale Unit 0 : kg 1 : lb 2 : g
2	Capacity	Setting Scale Max Capacity 1 : 15 kg / 30 lb 2 : 30 kg / 60 lb
3	Interval	Setting Usage of Multi-interval 0 : Single Interval 1 : Dual Interval
4	Cal Unit	Setting Calibration Weighing unit 0 : kg 1 : lb * This setting uses in Span Calibration, Percent Calibration, Linearity Adjust.

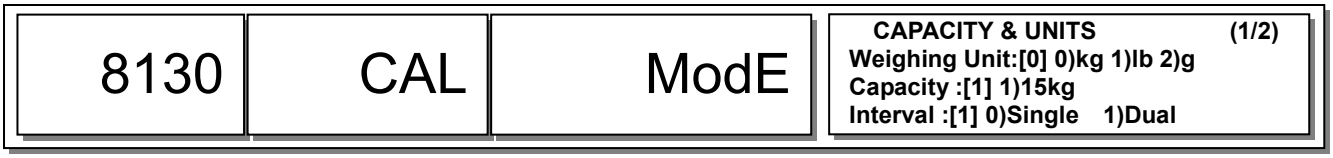

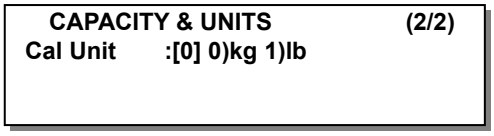

4.1.4 Gravity Constant (Menu Code 8140)

(Calibration MENU -> 1. Calibration -> 4. Gravity Constant)

CL-5000 scale enables to calibrate in any country. You can set according to country standard gravity constant data. For case of full recalibration set the factory gravity first and then local area gravity code.

(For span calibration Local gravity value is automatically matches with Factory gravity value)

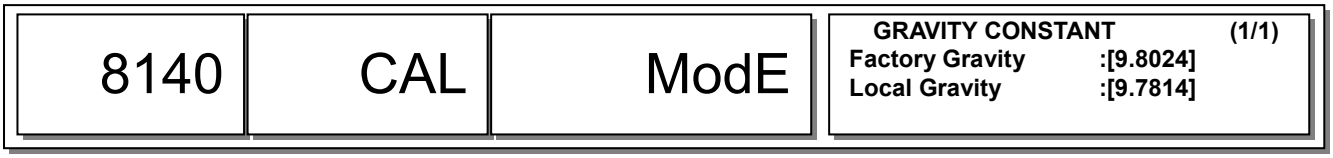

Use the following table to determine the proper G-Constant for your area.

Country	City	G-Constant	Country	City	G-Constant
Argentina	Buenos Aires	9.7979	Mexico	Mexico City	9.7799
Australia	Sydney	9.7979	Morocco	Rabat	9.7964
Austria	Vienna	9.8099	Netherlands	Amsterdam	9.8129
Belgium	Brussels	9.8114	New Zealand	Wellington	9.8039
Belize	Manamah	9.7904	Norway	Oslo	9.8189
Bolivia	La Paz	9.7844	Panama	Panama City	9.7814
Brazil	Brasilia	9.7889	Peru	Lima	9.7829
Canada	Montreal	9.8069	Philippines	Manila	9.7844
	Ottawa	9.8069	Poland	Swider	9.8159
	Toronto	9.8054	Portugal	Lisbon	9.8009
	Vancouver	9.8099	Rumania	Bucharest	9.8054
Check Republic	Prague	9.8114	Saudi Arabia	Riyad	9.7904
Chile	Santiago	9.7979	Scotland	Stockholm	9.8189
China	Hong Kong	9.8099	Singapore	Singapore	9.7814
Colombia	Bogota	9.7799	South Africa	Johannesburg	9.7919
Costa Rica	San Jose	9.7829	Spain	Madrid	9.8024
Cypress	Nicosia	9.7979	Switzerland	Bern	9.8084
Denmark	Copenhagen	9.8159	Taiwan	Taipei	9.7904
Ecuador	Quito	9.7724	Tunisia	Tunis	9.7799
Finland	Helsinki	9.8189	Turley	Ankara	9.8024
Germany	Dusseldorf	9.8129	Uruguay	Montevideo	9.7964
Great Britain	London	9.8144	USA	Anchorage	9.8189
Greece	Athens	9.8009		Atlanta	9.7964
Guatemala	Guatemala	9.7844		Boston	9.8039

Hungary	Budapest	9.8069		Chicago	9.8024
Indonesia	Djakarta	9.7814		Dallas	9.7949
Iraq	Baghdad	9.7964		Detroit	9.8039
Japan	Mishima	9.7979		Los Angeles	9.7979
Korea	Seoul	9.7994		New York	9.8024
Kuwait	Kuwait	9.7919		Philadelphia	9.8024
Lebanon	Beirut	9.7964		San Francisco	9.7994
Mauritius	Port Louis	9.7859	Venezuela	Caracas	9.7829

NOTE: The G-Constant is the acceleration of gravity in meters per second per second.

4.1.5 Percent Calibration (Menu Code 8150)

(Calibration MENU -> 1. Calibration -> 5. Percent Calibration)

When the case you don't have max weight for calibration. Percent Calibration enables to use lighter weight.

8150	CAL	ModE	**PERCENT CALIBRATION (1/1)** **Use Weight :[15] kg** **Full Capa Weight:15.000 kg**

① For 5kg weight, input "5"key and press "print"

ULoAd	10731	10731	**ZERO CALIBRATION(1/2)** **- Remove all weight.** **- Press PRINT when ready.**

② Clear the tray and press "PRINT", then "Wait4~Wait0" will display.

LoAd	0	10731	**SPAN CALIBRATION (2/2)** **- Place 5.000 kg on the platter.** **- Press PRINT when ready.**

③ Put 5kg on the tray the press "PRINT" after "Wait4~Wait0" exit menu.

8100	CAL	ModE	**CALIBRATION (2/3)** **4. Gravity Constant** **5. Percent Calibration** **6. Linearity Adjust**

4.1.6 Linearity Adjust (Menu Code 8160)

(Calibration MENU -> 1. Calibration -> 6. Linearity Adjust)

You can re-adjust the med-range weight level for precise calibration.

ULoAd	10731	10731	ZERO CALIBRATION (1/3) - Remove all weight. - Press PRINT when ready.

☐ For 5kg weight, input "5"key and press "print"

8160	CAL	ModE	LINEARITY ADJUST (1/1) Use Weight :[5] kg Full Capa Weight:15.000 kg

② Clear the tray and press "PRINT", then "Wait4~Wait0" will display

Mid	25802	36532	MID CALIBRATION (2/3) - Place 5.000 kg on the platter. - Press PRINT when ready.

③ Clear the tray and press "PRINT", then "Wait4~Wait0" will display

LoAd	77407	88137	SPAN CALIBRATION (3/3) - Place 5.000 kg on the platter. - Press PRINT when ready.

③ Put 5kg on the tray the press "PRINT" after "Wait4~Wait0".

8100	CAL	ModE	CALIBRATION (2/3) 4. Gravity Constant 5. Percent Calibration 6. Linearity Adjust

③ Put 15kg on the tray the press "PRINT" after "Wait4~Wait0" exit menu.

4.1.7 Zero & Tare Setting (Menu Code 8170)

(Calibration MENU -> 1. Calibration -> 7. Zero & Tare Setting)

CAUTION: This Setting is part of (OIML, NTEP, etc) regulation must be setting by the local restriction.

You can set the ZERO, TARE at acceptable range and maximum display range.

8170	CAL	ModE

ZERO & TARE SETTING (1/4)
Init-Zero range(%): [10]
Rezero Range(%) : [2]
Tare Range : [5.998]kg

ZERO & TARE SETTING (2/4)
Overload Range(d): [9]
Accumulation(Y/N) : [N]
Subtraction(Y/N) : [N]

ZERO & TARE SETTING (3/4)
Gross Zero Mark(Y/N): [Y]
Net Zero Mark(Y/N) : [Y]
Gross Zero-Tracking(Y/N): [Y]

ZERO & TARE SETTING (4/4)
Net Zero-Tracking(Y/N) : [Y]

☐ Init-Zero range

Before Sales mode you need to compare Calibrated A/D value and current A/D value need to be in the safe range order to function property. Scale will not function if there is a weight or any distortion on the tray.

☐ Re-zero Range (%)

During the usage, zero range might be unstable cause by tray and other condition. You can set the allowance percent (%) range for zero display. (OIML regulation restricts 2% of maximum weight range can be used)

☐ Tare Range

You can set the maximum weights of tare up to 5.9kg
(OIML regulation restriction is 6kg tare limits)

④ Overload Range(d)

You can set the maximum overload range. For example, [9] set as 15.045g (5gx[9]=45g). If the weight is over 15.045 overload message will appear.

⑤ Accumulation(Y/N)

You can set Tare weights additively. This is useful additional package is used for different goods.

⑥ Subtraction(Y/N)

You can set Tare only if the other tare weight is less then the first value.

⑦ Gross Zero Mark(Y/N)

The real weight value is 0(Gross Weight=0) display will indicate "▾ " on the gross weight

NOTE: * Gross weight is display will display total weight. (Tare setting does not effect)

* Net weight is remain value of Tare weight.

* If Tare setting is set as "N" the gross weight and net weight value is same.

⑧ Net Zero Mark(Y/N)

When Tare weight is set to zero, Zero mark will display. In other words Net Weight is zero.

⑨ Gross Zero-Tracking(Y/N)

You can set Zero-tracking while Gross Zero is 0. Factory setting is "Y".

⑩ Net Zero-Tracking(Y/N)

You can set Zero-tracking while Net zero is 0. Factory setting is "N".

4.2 Factory Setting (Menu Code 8180)

(Calibration MENU -> 1. Calibration -> 8. Factory Setting)

This setting A/D's advanced setting only for factory primary setting.

4.2.3 A/D Initialize (Menu Code 8183)

(Calibration MENU -> 1. Calibration -> 8. Factory Setting -> 3. A/D Initialize)

8183	CAL	ModE	A/D INITIALIZE (1/1) Are You Sure?(Y/N) :[N]

CAUTION: Must record setting values before Selecting [Y]. This will set the scale first default setting

4.2.4 Linearity Fine Adjust (Menu Code 8184)

(Calibration MENU -> 1. Calibration -> 8. Factory Setting -> 4. Linearity Fine Adjust)

☐Selecting"LinearityFineAdjust"

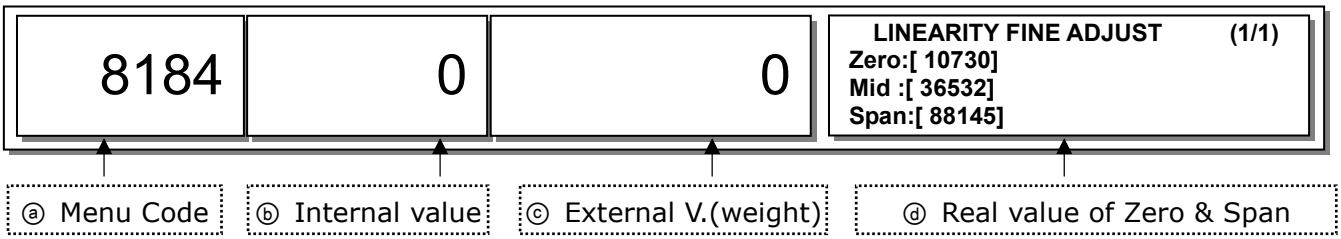

NOTE: You can set 0 by pushing "ZERO" This will update new Zero value.

☐ MENU 8106 Put 5kg(MAX=15kg) on the tray.

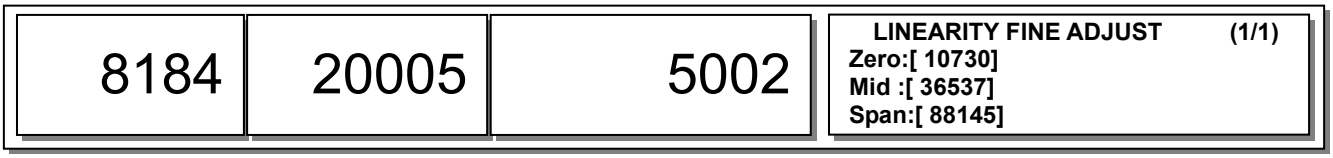

☐ Using cursor key for fine adjust.

* How to use cursor key

"☐" Increase Span value(ⓓ) to reduce internal (ⓑ)value

"☐" Decrease Span value(ⓓ) to increase internal (ⓑ)value

- Setting Mid value press "▾ "key
- Internal value 20005 to change 20000 press "☐" 5times.

* How to input setting value

- Use cursor key to change mid value.
- Insert "36537" then press "TEST"

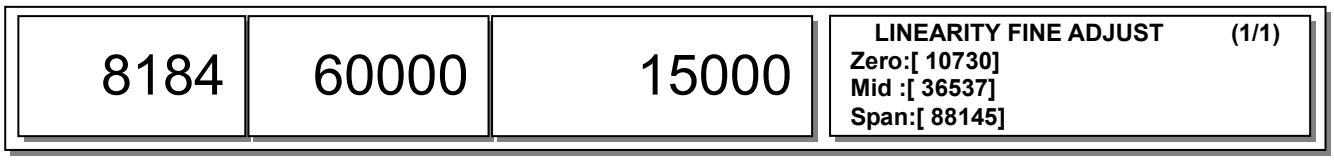

☐ Also change Span value with cursor key.

⑤ Press "SAVE" to save and exit.

4.3 Memory Clear

(Calibration MENU -> 2. System Options -> 1. Clear Memory)

You can clear memory depends on options below.

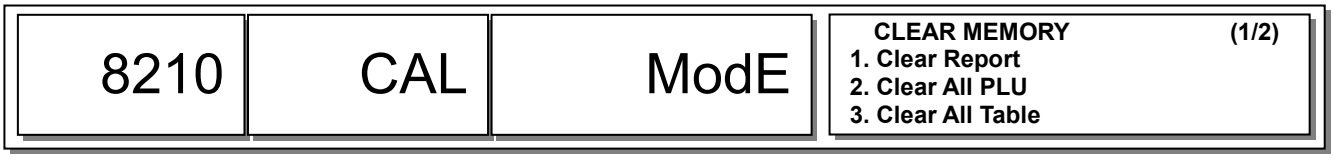

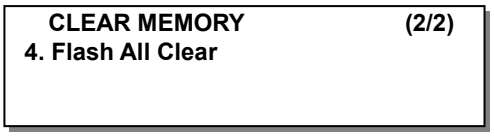

4.3.1 Clear Report (Menu Code 8211)

(Calibration MENU -> 1. Calibration -> 8. Factory Setting -> 1. Clear Report)

You can clear all the sales report.

4.3.2 Clear All PLU (Menu Code 8212)

(Calibration MENU -> 1. Calibration -> 8. Factory Setting -> 2. Clear All PLU)

Clear all PLU data. This time discount data is will be cleared.

4.3.3 Clear All Table (Menu Code 8213)

(Calibration MENU -> 1. Calibration -> 8. Factory Setting -> 3. Clear All Table)

Clear all Table date(Except PLU/discount data).

4.3.4 Flash All Clear (Menu Code 8214)

(Calibration MENU -> 1. Calibration -> 8. Factory Setting -> 4. Flash All Clear)

NOTE: After clearing all the memory. You must install primary data.

Except the program data all the item and font data will clear at once.

4.4 Scale Type

Menu Code 8220 (Calibration MENU -> 2. System Options -> 2. Scale Type)

Select model: Basic type (CL5000-B), pole type, (CL5000-R, P), hanging type (CL5000-H)

CAUTION: Selecting wrong model code will effect on key function.

-1 : Basic type(CL5000-B)

-2 : Pole type(CL5000-R, P)

-3 : Hanging type(CL5000-H)

4.5 Printer Hardware

No.	Sub-menus	Description
1	Print Mode	Select label, ticket, continuous label mode.
2	Label / Ticket Size	Lable mode: **"Width(60)"**, **"Height(40)"** and **"Gap length(2)"** Ticket mode: **"Width(60)"**, **"Feed(20)"** and **"End Margin(5)"** Continous Label: **"Width(60)"**, **"Feed(40)"** and **"End Margin(2)"** * ( ) are default value.
3	Sensor Calibration	Enter the "**Gap(128)"** and **"Peel(128)"** values for printing sensor calibration. * The values in ( ) are default. * If you press "TEST" key, Gap and Peel values are adjusted automatically. * In case of Ticket mode, Gap value is not saved.
4	Sensor & Motor	Setting Peel-off sensor, Rewind Motor, Label Paper type.
5	Print Intensity	Set the extent of intensity of label (ticket) printed.
6	Adjust Feed Length	Set adjusting values of feed length. This value can be from -200 to +200. You can change sign(+,-) by pressing ZERO key. + value will print higher than THP. * Pressing "TEST" key automatically feeds to adjust the feed length.
7	Label Pre-print	You can set preprint length.
8	Printer Initialize	You can reset printer.

4.5.1 Print Mode (Menu Code 8310)

(Calibration MENU -> 3. Printer Hardware -> 1. Print Mode)

Press "1" to get into "PRINT MODE."

You can select "0" for Label mode, "1" for Ticket mode or "2" for Continuous Label mode.

Press "PRINT" to save current selection.

4.5.2 Label/Ticket Size (Menu Code 8320)

(Calibration MENU -> 3. Printer Hardware -> 2. Label/Ticket Size)

You can input "Width," "Height," "Gap Length" of label manually.

"TEST" key will automatically measures current label.

* Case of ticket mode "TICKET SIZE" will display and "TEST" key will not function.

4.5.3 Sensor Calibration (Menu Code 8330)

(Calibration MENU -> 3. Printer Hardware -> 3. Sensor Calibration)

You can input "Gap," "Peel," "Out of Paper" manually.
"TEST" key will automatically feed the label several times to calculate the measurement.
* For Ticket mode display will be same except "Gap" value. (This value will not save)

4.5.4 Sensor & Motor (Menu Code 8340)

(Calibration MENU -> 3. Printer Hardware -> 4. Sensor&Motor)

Press "4" to get into "SENSOR&MOTOR".
You can select [Y], [N] for "ACTIVE PEEL-OFF," "ACTIVE REWIND MOTER," AND "LABEL PAPER."
* For Ticket mode display will be same. Only "ACTIVE PEEL-OFF" can be set.
* For Ticket mode Rewind-Motor and Label paper setting will not display.

4.5.5 Print Intensity (Menu Code 8350)

(Calibration MENU -> 3. Printer Hardware -> 1. Clear Memory)

You can enter any value from "0" to "20" set the tension of label/ticket.
Press "TEST" to test printing a label.

4.5.6 Adjust Feed Length (Menu Code 8360)

(Calibration MENU -> 3. Printer Hardware -> 6. Adjust Feed Length)

User may enter any value of the feed alignment from "-200" to "+200".
Press "ZERO" to toggle sign.
Press "TEST" to test feed or "ENTER" to save current "FEED Length value.
* 1pixel = 0.125mm , 8pixel = 1mm Ex) Value "+80" will feed 10mm more
Value "-40" will feed 5mm less

4.5.7 Label Pre-print (Menu Code 8370)

(Calibration MENU -> 3. Printer Hardware -> 3. Label Pre-print)

User may enter "Y(Yes)" or "N(No)" to select Preprint mode and any value of the preprint length from "0"mm to "10"mm.
Press "TEST" to test preprinting.

4.5.8 Printer Initialize (Menu Code 8380)

(Calibration MENU -> 3. Printer Hardware -> 8. Printer Initialize)

Initialize printer setting.

4.6 Network Options

5.6.1 Enable Interface (Menu Code 8410)

(Calibration MENU -> 4. Network Options -> 1. Enable Interface)

You can set usage of I/O interface.

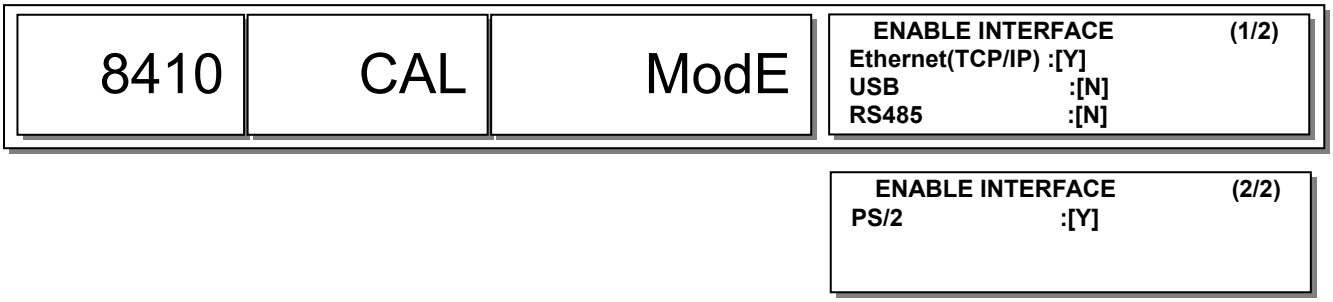

4.7 Self Test

4.7.1 Display Test (Menu Code 8510)

(Calibration MENU -> 5. Self Test -> 1. Display Test)

Selecting 1 will start Display test, press any key to stop and exit.

4.7.2 A/D Test (Menu Code 8520)

(Calibration MENU -> 5. Self Test -> 2. A/D Test)

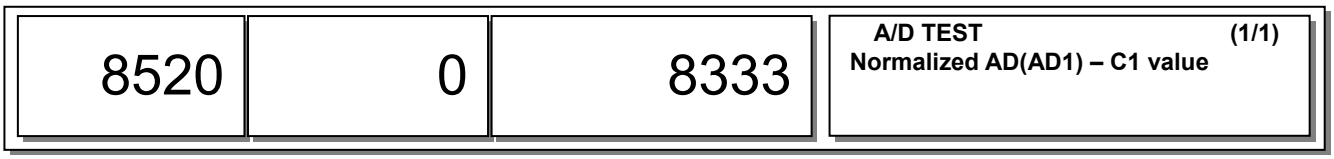

You can select A/D level "0"~"5" to test.

NOTE: You can set ZERO temporally within each level. Exiting menu will not keep zero value.

Key No.	Name	Description
0	Weight – External value	kg or lb (☐ : kg, ☐ : lb)
1	Normalized(Zeroing) A/D	Internal count (60,000). Calibration Zero - A/D
2	Normalized A/D	Internal count (60,000)
3	Unit Factorized A/D	Unit Factor applied A/D value
4	Linearized A/D	Linear incising A/D value
5	Filtered Raw A/D	Filtered Raw A/D

4.7.3 Keyboard Test (Menu Code 8530)

(Calibration MENU -> 5. Self Test -> 3. Keyboard Test)

You can test keyboard by pressing.

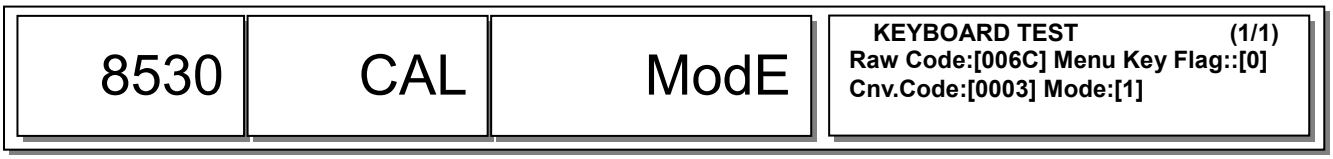

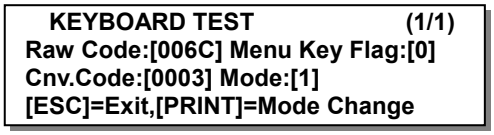

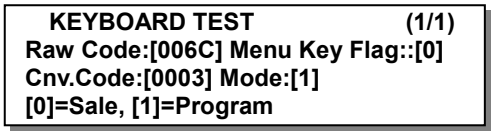

Press any keys to test Row Code and Conversion Code.

* Raw Code is location of key. (Upper left Connor is 1. For bench Type stars with 22)
* Conversion Code is function Code which has different code other then Raw Code.
* Menu Key Flag will set as 1 when "MENU" and other key is pushed same time.
* Press ESC will exit the test or change key mode.
    - ESC + ESC : End of test
    - ESC + PRINT key to change Mode
        Mode 0 : Sale Mode
        Mode 1 : program Mode

4.7.4 Chess Print (Menu Code 8540)

(Calibration MENU -> 5. Self Test -> 4. Chess Print)

Self Test Menu screen, press the 4 key for Printer Test. The scale will then print a TPH (Thermal Print Head) test label. This label print checker pattern helps to find problems with the TPH. You should clean the TPH before you try this procedure. Follow the maintenance procedure for cleaning the TPH. The following examples shows that some of problems that can occur.

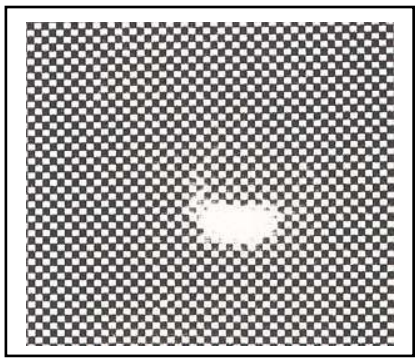

1

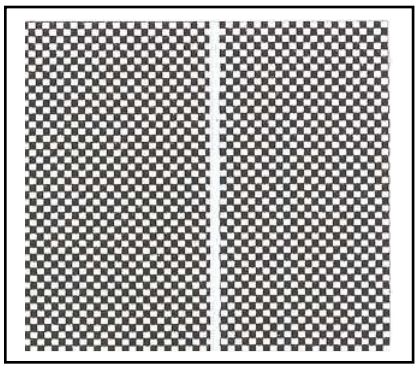

2

There are several things that this printout sample can reveal:

1. The rubber roller may be dirty or have something stuck to it. Also, the roller may be perforated.
2. This is a clear indication that the TPH has been damaged or burned out.
   If you need to replace the TPH, please contact the CAS Service Department.

4.7.5 Printer Sensor Test (Menu Code 8550)

(Calibration MENU -> 5. Self Test -> 5. Printer Sensor Test)

You can test PEEL-OFF sensor and Head up sensor in real time to check each results.

8550	CAL	ModE	PRINTER SENSOR TEST (1/2) Peel-off :[UNLOCK] Head-up :[CLOSE]

PRINTER SENSOR TEST (2/2)
Gap :[63]
Peel:[114]

	Test Items	Description
1	Peel-off	Cheek Peel-off senor stops label
2	Head-up	Cheek TPH head is open or not
3	Gap	Cheek label's gap
4	Peel	Peel-off sensor value

4.7.6 Memory Information (Menu Code 8560)

(Calibration MENU -> 5. Self Test -> 6. Memory Information)

You can install expansion memory-pack up to 6MB

Current memory show as O unused memory as X (each 0 is 1MB). Total amount of O is valuable memory.

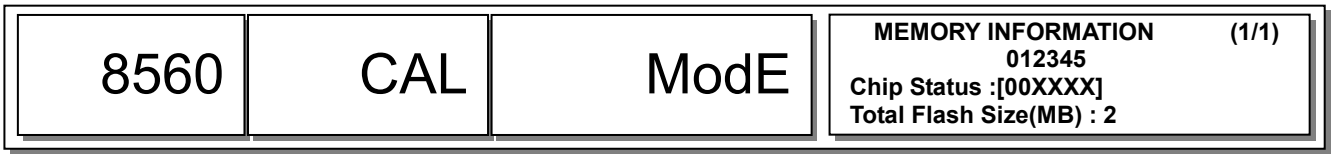

4.7.7 Firmware Version (Menu Code 8570)

(Calibration MENU -> 5. Self Test -> 7. Firmware Version)

You can cheek scale's firmware for upgrade.

This information defines main feature and debugging.

#1 Scale Main Firmware Version

#2 AD Module Firmware Version

#3 Ethernet Version

#4 Data Version

5. Parameter

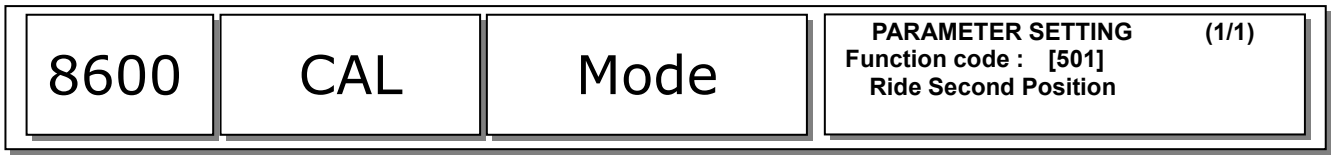

You can input Parameter number (“ Fuction Code: [ ]”) for predefine settings.

Factory parameter setting 800~999 is for scale usage settings.

(This code only can access in Calibration mode)

Other parameter setting 500~799 is for local dealer settings.

NOTE: For dealer setting entery: Press Menu key (MENU CODE 1000) and press [ZERO] key to enter. Massage “ Input Password: [ ]” will appear and enter system password “ 000419” also you can change at parameter setting 502.

5.1 Factory Setting (para 800~999)

1. Parameter 801

MESSAGE	VALUE	CONTENT	REMARK
Weight Display Pos	0~30	Define position of Weight VFD Display	

2. Parameter 802

MESSAGE	VALUE	CONTENT	REMARK
Weight Display Len	0~30	Define weight digit length of VFD Display	

3. Parameter 803

MESSAGE	VALUE	CONTENT	REMARK
Unit Price Display Pos	0~30	Define position of Price VFD Display	

4. Parameter 804

MESSAGE	VALUE	CONTENT	REMARK
Unit Price Display Len	0~30	Define price digit length of VFD Display	

5. Parameter 805

MESSAGE	VALUE	CONTENT	REMARK
Total Price Display Pos	0~30	Define position of total price VFD Display	

6. Parameter 806

MESSAGE	VALUE	CONTENT	REMARK
Total Price Display Len	0~30	Define totoal price digit length of VFD Display	

7. Parameter 807

MESSAGE	VALUE	CONTENT	REMARK
Tare Display Pos	0~30	Define position of Tare VFD Display	

8. Parameter 808

MESSAGE	VALUE	CONTENT	REMARK
Tare Display Len	0~30	Define Tare digit length of VFD Display	

9. Parameter 810

MESSAGE	VALUE	CONTENT	REMARK
Price Decimal Point	0~10	Define price position of decimal point	

10. Parameter 811

MESSAGE	VALUE	CONTENT	REMARK
Stable Indicator Pos	0~33	Define position of stable indicator	

11. Parameter 812

MESSAGE	VALUE	CONTENT	REMARK
Zero Indicator Pos	0~33	Define position of Zero indicator	

12. Parameter 813

MESSAGE	VALUE	CONTENT	REMARK
Tare Indicator Pos	0~33	Define position of Tare indicator	

13. Parameter 814

MESSAGE	VALUE	CONTENT	REMARK
Auto Indicator Pos	0~10	Define position of Auto indicator	

14. Parameter 815

MESSAGE	VALUE	CONTENT	REMARK
Save Indicator Pos	0~10	Define position of Save indicator	

15. Parameter 816

MESSAGE	VALUE	CONTENT	REMARK
Prepack Indicator Pos	0~10	Define position of Prepack indicator	

16. Parameter 817

MESSAGE	VALUE	CONTENT	REMARK
Shift Indicator Pos	0~10	Define position of Shift indicator	

17. Parameter 818

MESSAGE	VALUE	CONTENT	REMARK
Discount Indicator Pos	0~10	Define position of Discount indicator	

18. Parameter 819

MESSAGE	VALUE	CONTENT	REMARK
Commun. Indicator Pos	0~10	Define position of Communication indicator	

19. Parameter 821

MESSAGE	VALUE	CONTENT	REMARK
By-pcs Qty Position	0~20	Define position of By-pices quality indicator	

20. Parameter 822

MESSAGE	VALUE	CONTENT	REMARK
By-pcs Qty Length	0~20	Define digit length of By-pices quality on VFD Display	

21. Parameter 823

MESSAGE	VALUE	CONTENT	REMARK
By-pcs PCS Position	0~20	Define position of By-pices PCS	

22. Parameter 824

MESSAGE	VALUE	CONTENT	REMARK
By-pcs PCS Length	0~20	Define digit length of By-pices PCS length	

23. Parameter 825

MESSAGE	VALUE	CONTENT	REMARK
By-pcs Price Position	0~20	Define position of By-pices price	

24. Parameter 826

MESSAGE	VALUE	CONTENT	REMARK
By-pcs Price Length	0~20	Define digit length of By-pices price	

25. Parameter 827

MESSAGE	VALUE	CONTENT	REMARK
Count Qty Pos	0~20	Define position of Count quality	

26. Parameter 828

MESSAGE	VALUE	CONTENT	REMARK
Count Qty Length	0~20	Define digit length of Count quality	

27. Parameter 829

MESSAGE	VALUE	CONTENT	REMARK
Count Price Position	0~20	Define position of Count pricve	

28. Parameter 830

MESSAGE	VALUE	CONTENT	REMARK
Count Price Length	0~20	Define digit length of Count price	

29. Parameter 831

MESSAGE	VALUE	CONTENT	REMARK
Select Initial Screen	0~3	Select Initial start massage on display	0: Chess 1: Check List 2 : Version 3: Logo

30. Parameter 832

MESSAGE	VALUE	CONTENT	REMARK
Use Serial Out	Y/N	Transmit initial start by serial port.	Yes= USE No= NO USE

31. Parameter 833

MESSAGE	VALUE	CONTENT	REMARK
Use last using time	Y/N	Display last usage time.	Yes = USE No = NO USE

32. Parameter 834

MESSAGE	VALUE	CONTENT	REMARK
Use Clerk password	Y/N	During Initial start use Clerk password	Yes = USE No = NO USE

33. Parameter 861

MESSAGE	VALUE	CONTENT	REMARK
Prepack Print threshold(d)	10~30,000	Auto-detect weight difference in range	

34. Parameter 862

MESSAGE	VALUE	CONTENT	REMARK
MIN Weight for sale(d)	10~999	Set minimum range of sales weight	

35. Parameter 866

MESSAGE	VALUE	CONTENT	REMARK
Weight Decimal Sign	CHAR	Set decimal point on weight	USE “ CHAR” to input ASCI

36. Parameter 867 (Price Decimal Sign)

MESSAGE	VALUE	CONTENT	REMARK
Price Decimal Sign	CHAR	Set decimal point on price	USE “ CHAR” to input ASCI

37. Parameter 885

MESSAGE	VALUE	CONTENT	REMARK
[00] Key Format	1~4	Set “ 00_” key input format *(1 means $1*10^n$)	1 = 10 2 = 100 3 = 1000 4 = 10000

38. Parameter 886

MESSAGE	VALUE	CONTENT	REMARK
ErrorMsg Clear Timeout	0~99	Set Error message display time	Display time = Input# X 0.1 sec

39. Parameter 887

MESSAGE	VALUE	CONTENT	REMARK
Auto Call Keycode	0~999	Set Auto Call Keycode (for sale mode)	Reference Pare 586 for set time

40. Parameter 888

MESSAGE	VALUE	CONTENT	REMARK
Key Clear Time(0.1s)	1~99	Set key clear time	Set Value = Input# x 0.1 Sec

41. Parameter 900

MESSAGE	VALUE	CONTENT	REMARK
Ethernet (TCP/IP)	Y/N	Ethernet usage	Yes = USE No = NO USE

42. Parameter 901

MESSAGE	VALUE	CONTENT	REMARK
USB	Y/N	USB usage	Yes = USE No = NO USE

43. Parameter 902

MESSAGE	VALUE	CONTENT	REMARK
RS485	Y/N	RS485 usage	Yes = USE No = NO USE

44. Parameter 903

MESSAGE	VALUE	CONTENT	REMARK
PS/2	Y/N	PS/2 usage	Yes = USE No = NO USE

45. Parameter 920~921

MESSAGE	VALUE	CONTENT	REMARK
920 -> AM Sign 921 -> PM Sign	CHAR	Set AM/PM correspond name	Able to CHAR key

46. Parameter 922 ~ 933

MESSAGE	VALUE	CONTENT	REMARK
922 -> Month 1 923 -> Month 2 924 -> Month 3 925 -> Month 4 926 -> Month 5 927 -> Month 6 928 -> Month 7 929 -> Month 8 930 -> Month 9 931 -> Month 10 932 -> Month 11 933 -> Month 12	CHAR	Set correspond month name	Able to CHAR key

47. Parameter 934 ~ 940

MESSAGE	VALUE	CONTENT	REMARK
934 -> Week 1 935 -> Week 2 936 -> Week 3 937 -> Week 4 938 -> Week 5 939 -> Week 6 940 -> Week 7	CHAR	Set correspond date name	Able to CHAR key

41. Parameter 996

MESSAGE	VALUE	CONTENT	REMARK
Allow FWUPDATE	0/1	F/W Update Condition	0 = No Check CAL 1 = Check CAL

42. Parameter 997

MESSAGE	VALUE	CONTENT	REMARK
Display Style	3/4	Display Style	3 = 5/6/7 4 = 4/5/6/6

43. Parameter 998

MESSAGE	VALUE	CONTENT	REMARK
Factory Default	Y/N	Set Factory Default	

44. Parameter 999

MESSAGE	VALUE	CONTENT	REMARK
Country Code	0~9	Country Setting	0 = UN 1 = KR 2 = US 3 = EU 5 = RUS 6 = ETC

5.2 Dealer Setting (para 500~799)

1. parameter 501

MESSAGE	VALUE	CONTENT	REMARK
Ride Second Position	Y/N	If FOR key is not exist on key pad You can set initial reference (R1,R2,R3) (Count, PCS, Price)	KOREA USE

2. parameter 502

MESSAGE	VALUE	CONTENT	REMARK
System Password	Char	Input dealer password NOTE: Use 4byte memory (If PW is 1234 input 001234)	

3. parameter 530

MESSAGE	VALUE	CONTENT	REMARK
Date Format	Numeric	Set current date format 0 : YY/MM/DD 1 : MM/DD/YY 2 : MM/YYYY 3 : DD/MM/YY	YY : Year MM : Month DD : Day

4. parameter 531

MESSAGE	VALUE	CONTENT	REMARK
Time Format	Numeric	Set current time format 0 : HH:MM:SS (24hours) 1 : HH:MM:SS (12hours) 2 : HH:MM 3 : HH:MM am	HH : Hour MM : Minute SS : Second

5. parameter 532

MESSAGE	VALUE	CONTENT	REMARK
Sell by date Format	Numeric	0: Calculate expiredate with current date and input date 1: Input all date information(yy/mm/dd) (Input date less then 4 digit, scale will recognize as month and date (mm/dd))	

6. parameter 533

MESSAGE	VALUE	CONTENT	REMARK
Use Multi Unit	Y/N	Set unit/price of Input PLU (para 534 sets weight unit for price) Set (kg) unit/price 1kg or 100g Occording to Para 534 set value call-up the weight unit/price Set(lb) unit/price lb, 1/2lb, 1/4lb Occording to Para 534 set value call-up the weight unit/price Off Multi-Unit price, Para 534 will over-ride unit/price of scale. NOTE: parameter 534	* kg= 1 : 1 kg 2 : 100 g * lb= 1 : 1 lb 2 : 1/2 lb 3 : 1/4 lb IF Para 534 set kg input PLU 100 g as = $ 10.00 Call-up unit/price will set as kg = $ 100.00

7. parameter 534

MESSAGE	VALUE	CONTENT	REMARK
Default UnitWeight	Numeric	Set default unit of PLU All weight/price calculate according to followings: 1 : 1kg 2 : 100g * Default Weight unit is lb 1 : 1lb	

8. parameter 535

MESSAGE	VALUE	CONTENT	REMARK
Display Message Time(0.1s)	Numeric	Set display time for Error, Warning massage. Default = 3	

9. parameter 536

MESSAGE	VALUE	CONTENT	REMARK
Use kg/lb key	Y/N	Use kg/lb key	

10. parameter 537

MESSAGE	VALUE	CONTENT	REMARK
Use kg/lb Auto Conversion	Y/N	Use kg/lb Auto Conversion	

11. parameter 540

MESSAGE	VALUE	CONTENT	REMARK
Barcode Price Cut	Numeric	Set barcode last digit(price) to leave out 0~3	When input = 1 $12.34 -> 123

12. parameter 541

MESSAGE	VALUE	CONTENT	REMARK
Barcode Weight Cut	Numeric	Set barcode last digit(weight) to leave out 0~3	When input = 1 1.234kg -> 123

13. parameter 550

MESSAGE	VALUE	CONTENT	REMARK
Out of paper threshold	Numeric	Set roll paper sencer sensitivity If sencer dosen’ t recognize roll paper, setting value should be lower	Default 200

14. parameter 551

MESSAGE	VALUE	CONTENT	REMARK
Use double print(auto)	Y/N	Set “ Y” to double print (scale will print same label twice but counts as one transaction) You must press print key to function	

15. parameter 552

MESSAGE	VALUE	CONTENT	REMARK
Print Preset Tare Symbol	Y/N	Print Preset Tare Symbol on Label	

16. parameter 553

MESSAGE	VALUE	CONTENT	REMARK
Print Net Weight Symbol	Y/N	Print Preset Tare Symbol on Label	

17. parameter 554

MESSAGE	VALUE	CONTENT	REMARK

One time print (Prepack)	Y/N	If Para 580 set as Y, Sets one time print for prepack and auto+save. You must call up PLU each time to print.	

18. parameter 561

MESSAGE	VALUE	CONTENT	REMARK
Use cashdraw sensor	Y/N	Set cash draw sensor NOTE: para 562	

19. parameter 562

MESSAGE	VALUE	CONTENT	REMARK
Cashdraw close time	Numeric	Set cashdraw duration of opening and closing 1=0.1ms for 0.5sec delay input 5	

20. parameter 570

MESSAGE	VALUE	CONTENT	REMARK
Non Weight sale(WT.on Tray)	Y/N	Allow transaction for pcs/PLU while weight on the tray. (the weight doen’ t count as a price)	

21. parameter 571

MESSAGE	VALUE	CONTENT	REMARK
Print Weight(by count sale)	Y/N	Allow to print weight while PLU/By count (Weight value doen’ t effect on price) *Weight is only for reference	

22. parameter 572

MESSAGE	VALUE	CONTENT	REMARK
Apply U.Price for T.D/C	Y/N	Allow to display discounted unit-price for total price	

23. parameter 580

MESSAGE	VALUE	CONTENT	REMARK
Print one time after call	Y/N	Allow to print one time per transaction. NOTE: In prepack mode, reset para 554 for Auto+Save	

24. parameter 581

MESSAGE	VALUE	CONTENT	REMARK
Print only WT.(u.p.zero)	Y/N	Allow to print with weight value even if Unit price is 0 (Use for only product weight transaction, not on price)	

25. parameter 582

MESSAGE	VALUE	CONTENT	REMARK
Use X key (by WT.)	Y/N	Allow to use X key on by weight type (For By-cont and pcs allow X key)	

26. parameter 583

MESSAGE	VALUE	CONTENT	REMARK
Allow continuous sale	Y/N	Allow to use add-up transaction Add-up the product/ continually (after transaction scale will set zero)	

27. parameter 584

MESSAGE	VALUE	CONTENT	REMARK
Use Tare ID	Y/N	Set input method Tare ID or direct input. If you set Y, must set tare weight before sale	

28. parameter 585

MESSAGE	VALUE	CONTENT	REMARK
Use U.Price for key discount	Y/N	Set discount key for (-,%) individual item or total price	

29. parameter 586

MESSAGE	VALUE	CONTENT	REMARK
Indirect PLU call Time	Numeric	Set duration time for call-up indirect PLU NOTE: Input 0 will not call-up any PLU In this case you must press PLU butten to call-up	1 = 0.1s 10 = 1sec

30. parameter 587

MESSAGE	VALUE	CONTENT	REMARK
Override only u.p.zero PLU	Y/N	Set auto override when unit price is 0 You must input unit price to print	IF parameter 588 is set Y override value is saving

31. parameter 588

MESSAGE	VALUE	CONTENT	REMARK
Save Overrided u.p.zero PLU	Y/N	If para 587 set as 0, save the unit price to PLU Next call up PLU has saved unit price. NOTE: Only menu 1863 must be set	

32. parameter 589

MESSAGE	VALUE	CONTENT	REMARK
Apply Price Round	0~4	0: No use 1: For each PLU 2: Addup Round (ticket only) 3: Addup Round (label and ticket) 4: Cutting	Default = 0

33. parameter 590

MESSAGE	VALUE	CONTENT	REMARK
Round Type	Numeric	0 : Round down, Total Price 1 : Round off, Total Price Defalut value : Set value parameter 591	Default = 0

34. parameter 591

MESSAGE	VALUE	CONTENT	REMARK
Price Round Unit	Numeric	Set round value of last digit total price (set value: 0,5,10,100,1000 etc) This value set correspond with para 590 (Round off/down)	Set value=100 para 590 set as 1 ex 1) Total Price=12345 Set value applied Total Price=12300 ex 2)

			Total Price=12355 Set value applied Total Price=12400

35. parameter 592

MESSAGE	VALUE	CONTENT	REMARK
Weight Round Unit	Y/N	Currently no use Weight round off/down in 10 unit Calculate and print at same time	

36. parameter 593

MESSAGE	VALUE	CONTENT	REMARK
Use By pcs PLU	Y/N	Set by pcs PLU Y for count/quantity N for simple conut function	

37. parameter 594

MESSAGE	VALUE	CONTENT	REMARK
Print under Min. Weight	Y/N	Allow to print under minium weight	

38. parameter 595

MESSAGE	VALUE	CONTENT	REMARK
Individual Reset(Z Report)	Y/N	Y : Set to erase each repot on Z report NOTE: May cause effect on other reports N: Set to erase all the report at once Exept X1/X2 is separate item	X Report : only call-up record and print Z Report : allow to call-up and erase record for final-report

39. parameter 596

MESSAGE	VALUE	CONTENT	REMARK
X/Z Report	Y/N	Set to make a report NOTE: N makes no transaction therefore return key does not function	

40. parameter 597

MESSAGE	VALUE	CONTENT	REMARK
Prepack Report	Y/N	Set to make a report on Prepack mode	Set para 956 as N This set will

			not make report

41. parameter 598

MESSAGE	VALUE	CONTENT	REMARK
Print when Z report clear	Y/N	Set to print on Z report clear	Set as N X report only prints Z report erase only

42. parameter 599

MESSAGE	VALUE	CONTENT	REMARK
Print last Result (X key)	Y/N	Print last Result with X key	

43. parameter 600

MESSAGE	VALUE	CONTENT	REMARK
Auto clear key tare	Y/N	Set undo key-tare value after sale (when PLU is clear)	

44. parameter 601

MESSAGE	VALUE	CONTENT	REMARK
Auto clear weight tare	Y/N	Set undo weight-tare value after sale	

45. parameter 602

MESSAGE	VALUE	CONTENT	REMARK
Use Canadian tare	Y/N	Set to keep tare value if PLU has own tare value (for reset tare value, must reset scale)	

46. parameter 603

MESSAGE	VALUE	CONTENT	REMARK
PLU tare override by WT.Tare	Y/N	Set to change weight tare value after call-up the PLU (Must greater then call-up PLU tare)	

47. parameter 604

MESSAGE	VALUE	CONTENT	REMARK
Keep key tare(PLU tare)	Y/N	Allow to over-ride last called-up PLU value Last key tare value is over-ride by PLU key tare	

		After transaction PLU tare is clear and defaut key tare value is set	

48. parameter 605

MESSAGE	VALUE	CONTENT	REMARK
Accumulation tare	Y/N	Set to use accumulation tare NOTE: only tare value has to greater then last one	

49. parameter 606

MESSAGE	VALUE	CONTENT	REMARK
Subtraction tare	Y/N	Set to use subtraction tare Only set tare value less then last tare value	

50. parameter 607

MESSAGE	VALUE	CONTENT	REMARK
Tare Input Type	0~4	Check input tare	When invalid value 0: Error 1: No Round 2: Round Off 3: Round Down 4: Round Up

51. parameter 608

MESSAGE	VALUE	CONTENT	REMARK
Tare after PLU call	Y/N	Set tare value after PLU is selected	

52. parameter 609

MESSAGE	VALUE	CONTENT	REMARK
Display tare only weight tare	Y/N	Set to display main tare only PLU is weight type	Apply on EU display mode

53. parameter 626

MESSAGE	VALUE	CONTENT	REMARK
Display Primary sign	String	Set money curret for display	$

54. parameter 627

MESSAGE	VALUE	CONTENT	REMARK
Display Last sign	String	Set smaller money current for display	

55. parameter 628

MESSAGE	VALUE	CONTENT	REMARK
Weight LB Symbol 1	String	Set use weight unit/symbol for lb (CAUTION: do not change)	lb

56. parameter 629

MESSAGE	VALUE	CONTENT	REMARK
Weight LB Symbol 2	String	Set use sub weight unit/symbol for lb (do not change)	oz

57. parameter 630

MESSAGE	VALUE	CONTENT	REMARK
Weight symbol 1	string	Set use weight unit/simbol (CAUTION: do not change)	kg

58. parameter 631

MESSAGE	VALUE	CONTENT	REMARK
Weight symbol 2	String	Set use sub weight unit/symbol (do not change)	g

59. parameter 632

MESSAGE	VALUE	CONTENT	REMARK
Primary sign	String	Set money curret	$

60. parameter 633

MESSAGE	VALUE	CONTENT	REMARK
Last sign	String	Set smaller money current	

61. parameter 634

MESSAGE	VALUE	CONTENT	REMARK
Time separate sign	Char.	Set time/min/sec of lettering	:

62. parameter 635

MESSAGE	VALUE	CONTENT	REMARK
Date separate sign	Char.	Set year/month/date of lettering	

63. parameter 636

MESSAGE	VALUE	CONTENT	REMARK
Print out format	Numeric	Set to print money currency (display/ticket, not on label) 0 : “ 100.00” type 1 : “ $ 100.00” type 2 : “ 100.00 $” type 3 : “ $ 100.00 c” type 4 : “ $100.00c(Greek)” type	For type 3 useage Parameter 633 (last sign)must set before this setting

64. parameter 637

MESSAGE	VALUE	CONTENT	REMARK
Print out format(LABEL)	Numeric	Set to print money currency on label (Label print only for total price) 0 : “ 100.00” type 1 : “ $100.00” type 2 : “ 100.00$” type 3 : “ $100.00c” type 4 : “ $100.00c(Greek)” type * default : 0	For 3,4 type usage Parameter 633 last sign must set before For 4 type only display money is below decimal point (EX: “ 56c”)

65. parameter 638

MESSAGE	VALUE	CONTENT	REMARK
Set Dual Currency	Numeric	0: No use 1 : use Use currency table 1 as dual currency (Use when 2types of currency is used)	

66. parameter 640~667

MESSAGE	VALUE	CONTENT	REMARK
Edit label caption	String	Edit label heading caption	

67. parameter 701

MESSAGE	VALUE	CONTENT	REMARK
Prt Tax(Report)	Y/N	Set to print Tax report on scale or clerk report	

68. parameter 702

MESSAGE	VALUE	CONTENT	REMARK
Prt Pay(Report)	Y/N	Set to print Pay report on scale or clerk	

69. parameter 703

MESSAGE	VALUE	CONTENT	REMARK
Prt Round Summary(Report)	Y/N	Set to print Round report on scale or clerk	

70. parameter 711

MESSAGE	VALUE	CONTENT	REMARK
Prt Repack(Report)	Y/N	Set to print Repack report on scale or clerk	

71. parameter 712

MESSAGE	VALUE	CONTENT	REMARK
Prt Prepack(Report)	Y/N	Set to print Preaock report on scale or clerk	

72. parameter 713

MESSAGE	VALUE	CONTENT	REMARK
Prt Negative(Report)	Y/N	Set to print Negative report	

73. parameter 714

MESSAGE	VALUE	CONTENT	REMARK
Prt NoSaleOpen(Report)	Y/N	Set to print No sale open count	

74. parameter 771

MESSAGE	VALUE	CONTENT	REMARK
Enable Clerk	Y/N	Enable Clerk Function & Menu	

75. parameter 772

MESSAGE	VALUE	CONTENT	REMARK
Enable Discount	Y/N	Enable Discount Function & Menu	

76. parameter 773

MESSAGE	VALUE	CONTENT	REMARK
Enable TAX Table	Y/N	Enable Tax Function & Menu	

77. parameter 774

MESSAGE	VALUE	CONTENT	REMARK
Enable Origin	Y/N	Enable Origin Function & Menu	

78. parameter 775

MESSAGE	VALUE	CONTENT	REMARK
Enable Tare Table	Y/N	Enable Tare Table Function & Menu	

79. parameter 776

MESSAGE	VALUE	CONTENT	REMARK
Enable Nutri-Facts	Y/N	Enable Nutri-Facts Function & Menu	

80. parameter 777

MESSAGE	VALUE	CONTENT	REMARK
Enable Traceability	Y/N	Enable Traceability Function & Menu	

81. parameter 778

MESSAGE	VALUE	CONTENT	REMARK
Enable Customer	Y/N	Enable Customer Function & Menu	

82. parameter 779

MESSAGE	VALUE	CONTENT	REMARK
Enable Currency	Y/N	Enable Currency Function & Menu	

83. parameter 780

MESSAGE	VALUE	CONTENT	REMARK
Enable Department	Y/N	Enable Department	

6. Servicing & Parts Replacement

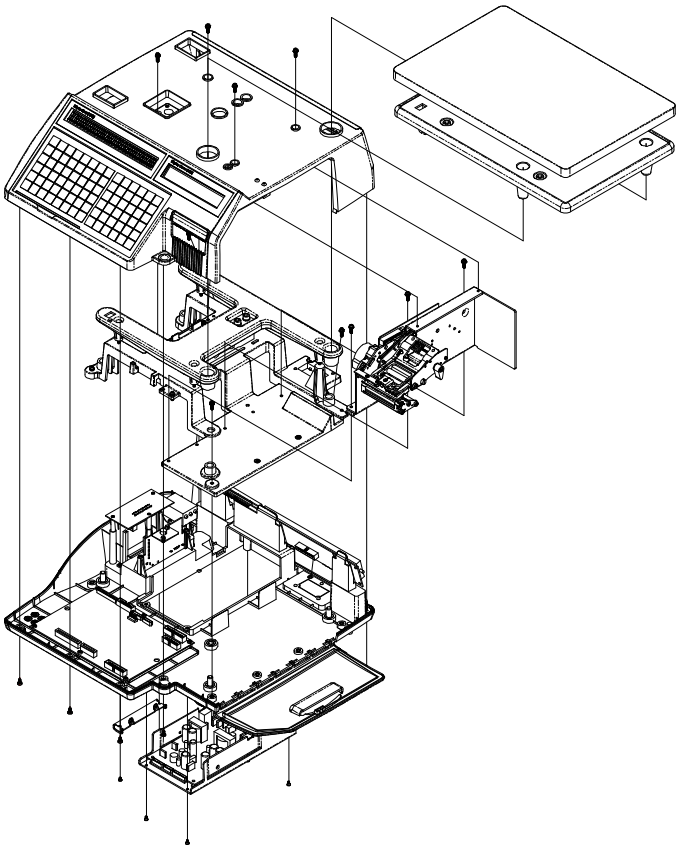

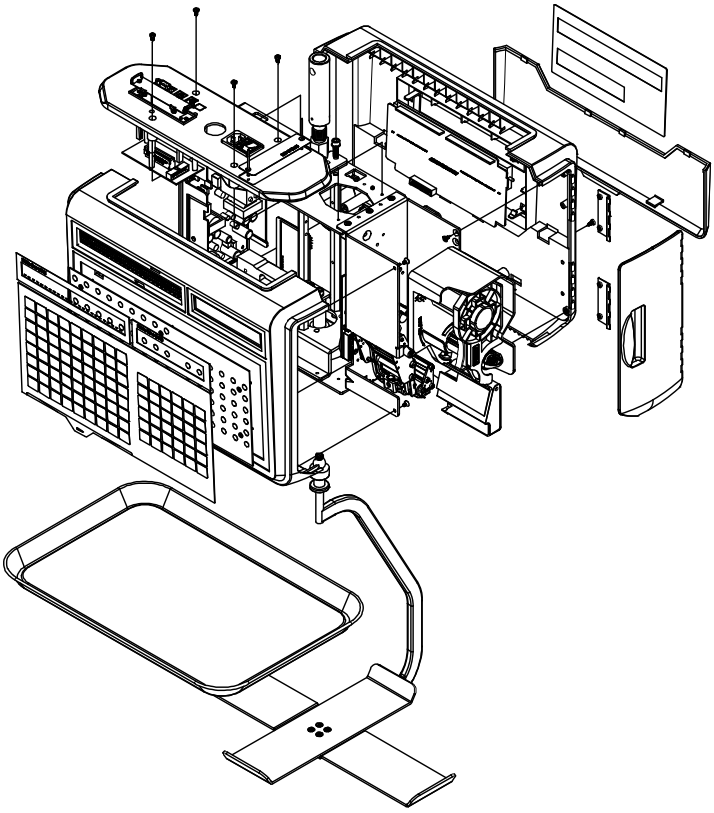

6.1 Platform Safety Overload Adjustment

1) Turn power off and remove power cord
2) Remove tray from scale (make sure lift right side first and unlock the left hook)

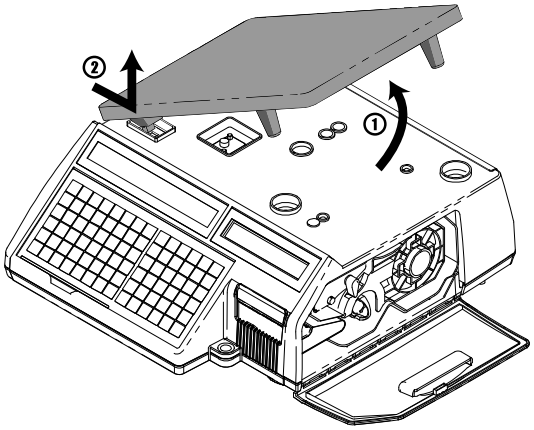

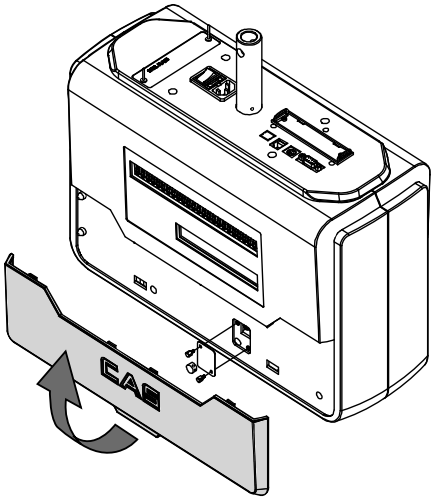

3) Remove calibration cealing

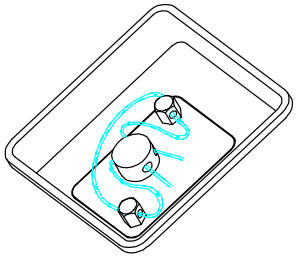

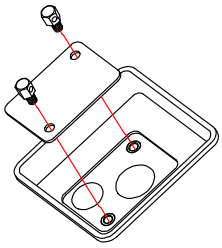

4) Remove the upper case
5) Put 150% of max weight on platform rear right. This point Allen-bolt should not be touched
6) Adjust Allen-bolt just about to touch the bottom frame
7) Contiune the procedure on each corner

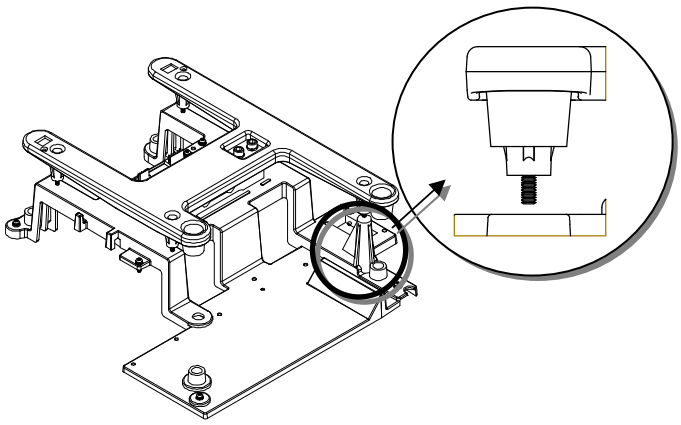

B,P,R-type

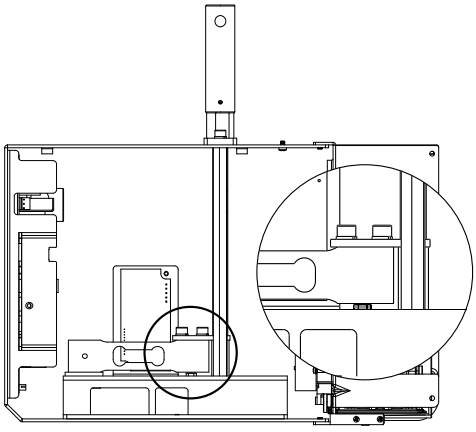

H-type

6.2 Removing the Upper Case

1) Turn power off and remove power cord
2) Remove tray from scale (make sure lift right side first and unlock the left hook)
3) Remove printer cartridge
4) Remove 6 bolt from bottom case(for pole type: remove pole mount bolt first)

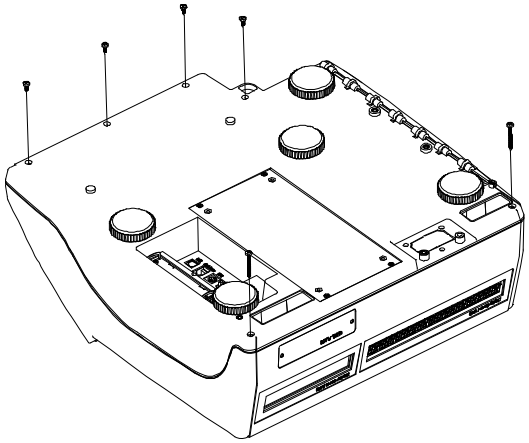

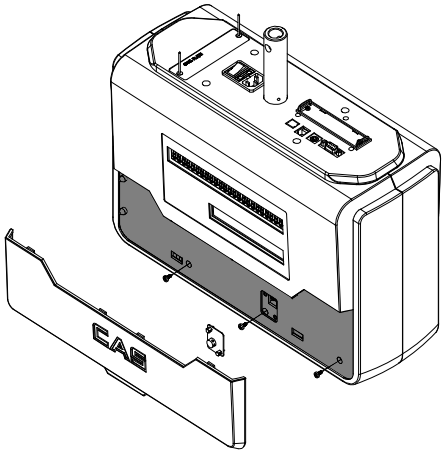

For hanging type: remove 3 bolt from front cover

5) Remove 4bolt from upper case

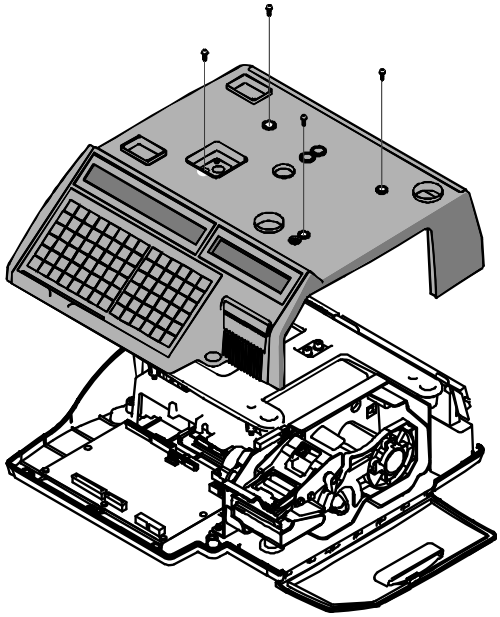

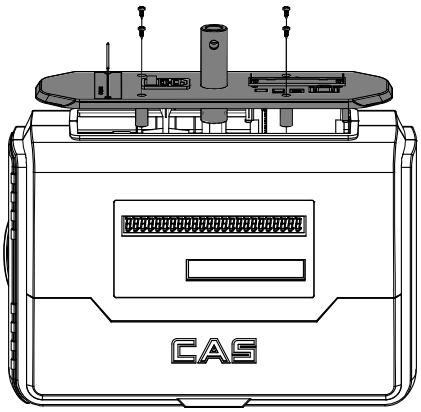

6) Remove keybord and display cable to remove upper case

B,P,R type:

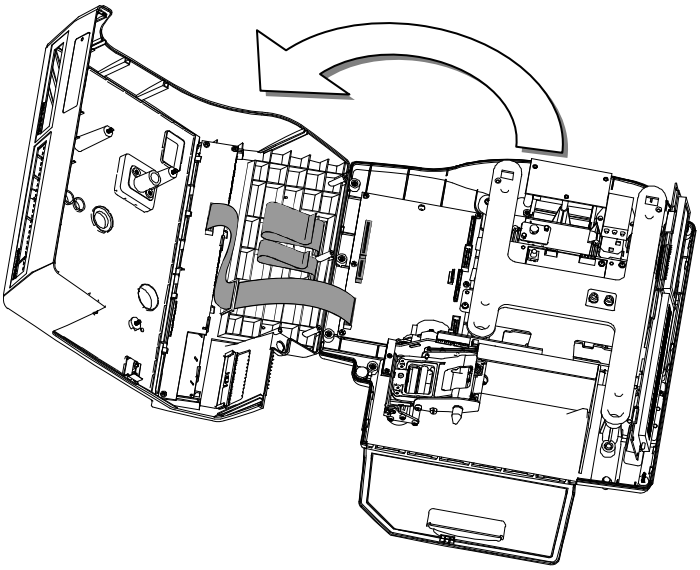

* Carefull with front key pad connector

H type:

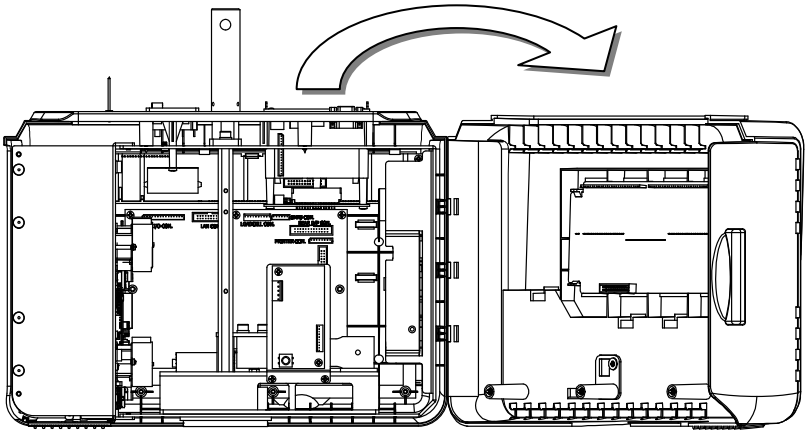

* Open up front cover from printer part.

NOTE: Assemble hook part first.

Remove front cover bolt (2 bolt)

Open up from printer side to disassambel front cover

6.3 Main board Replacement

1) Turn power off and remove power cord
2) Remove following cables
   - SMPS Line
   - Key Board Line
   - Display Board Line
   - Printer Board Line
   - A/D Board Line
3) Remove following bolt to remove main board

B,P,R type:

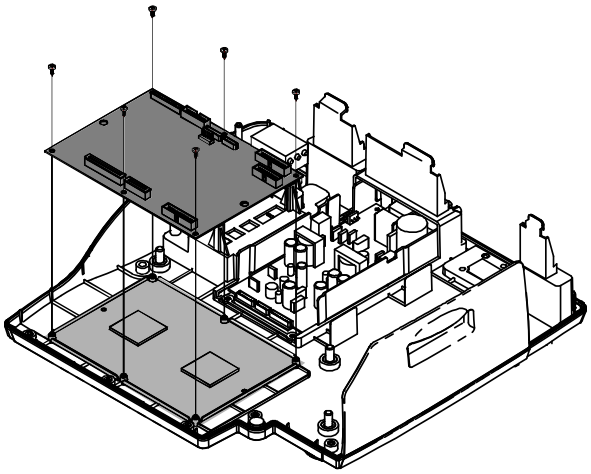

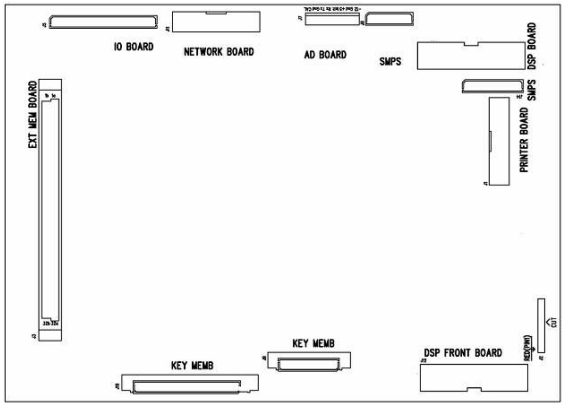

Connector locations

H type:

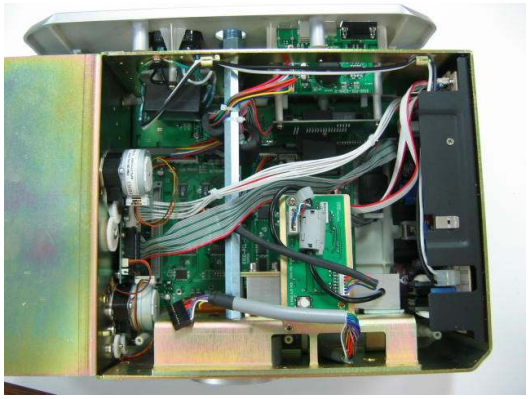

1. remove power cable from SMPS and ground wire.

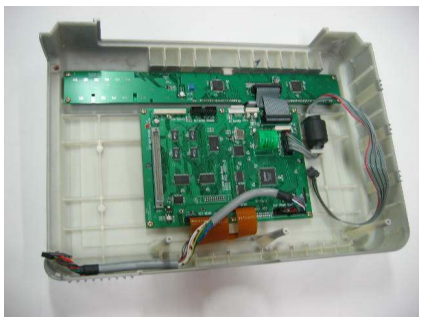

2. Remove support fram and replace main board.

6.4 Power Supply Replacement

1) Turn power off and remove power cord
2) Remove upper case(following 6.2)
3) Remove power lines (white cables)

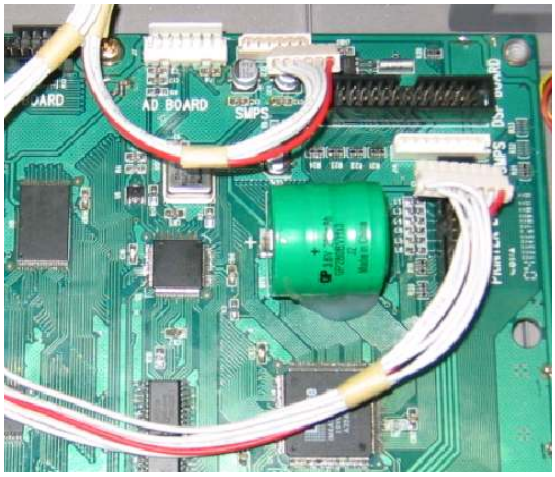

4) Remove bottom Power module(SMPS) bolt(4)

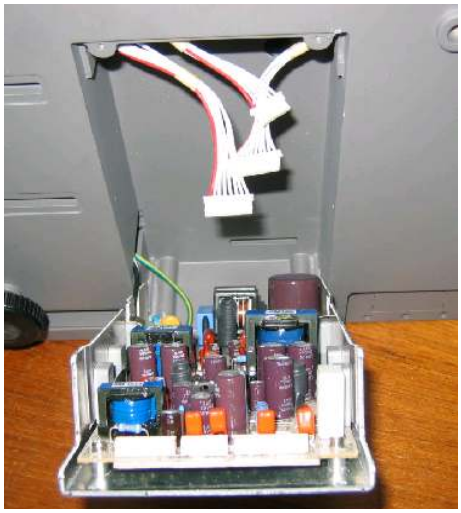

5) Full forward power module and remove power cables on SMPS

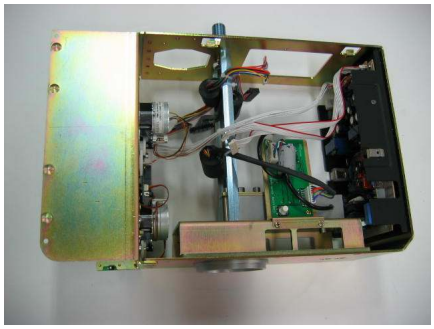

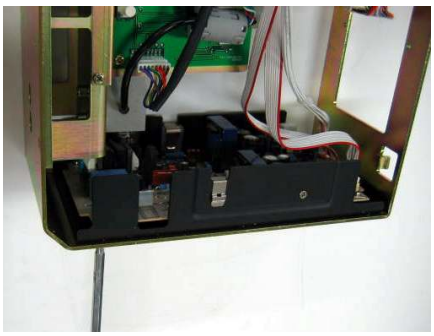

6) Disassamble support frame and remove side bolt(4) to remove power supply.

6.5 Load Cell & AD Converter Replacement

1) Turn power off and remove power cord
2) Remove upper case(6.2)
3) Remove upper frame(Load cell moult)bolt

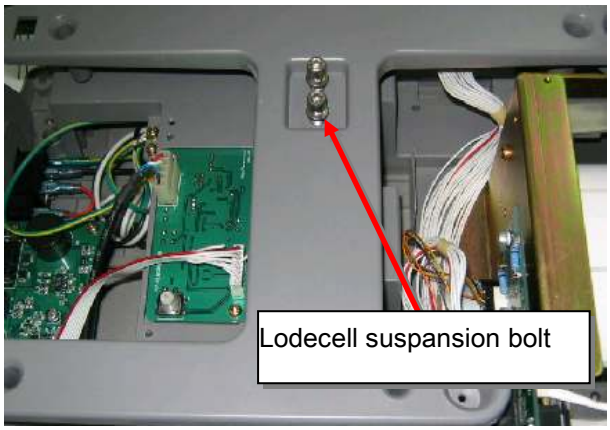

4) Remove bottom frame bolt

NOTE: Carefull with load cell this procedure may cause critical damage on scale

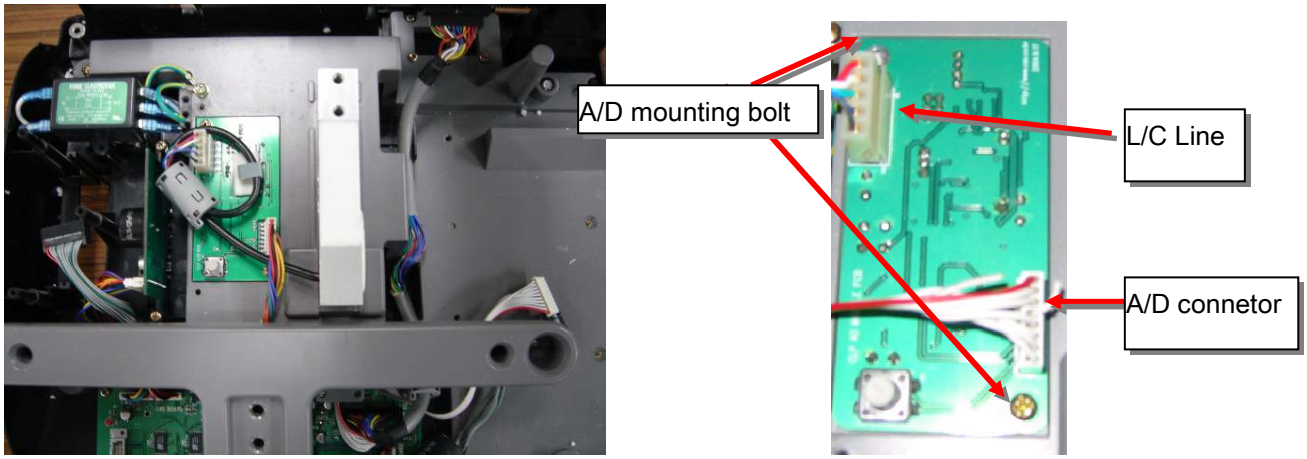

5) Remove A/D module bolt(2) and cable(A/D data line, L/C line)
6) For H type: Remove LC suspension bolt from bottom fram (there are two holes for easy access)

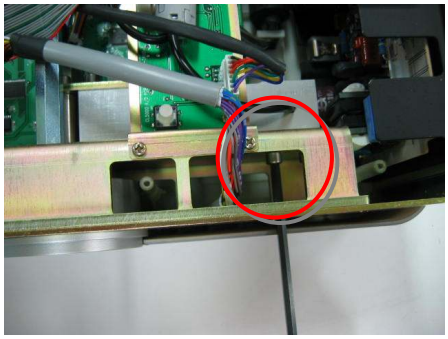

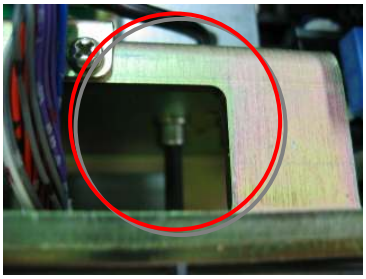

6.6 Print Assembly Replacement

1) Turn power off and remove power cord
2) Remove printer cartridge
3) Remove upper case(6.2)
4) Remove printer connecting bolt

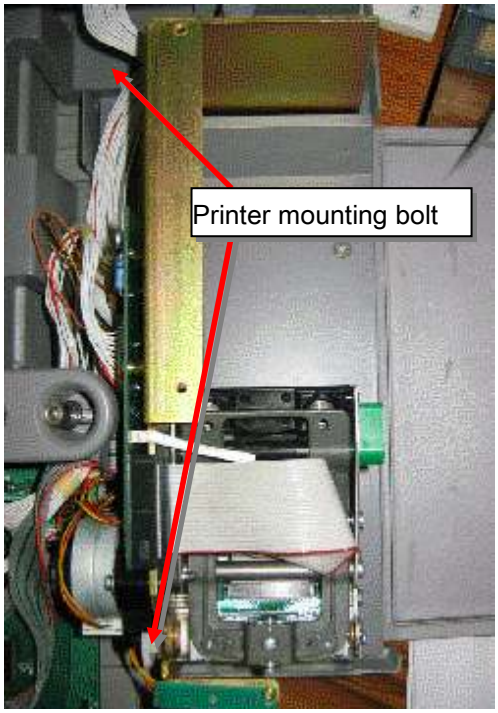

(B,P,R type)

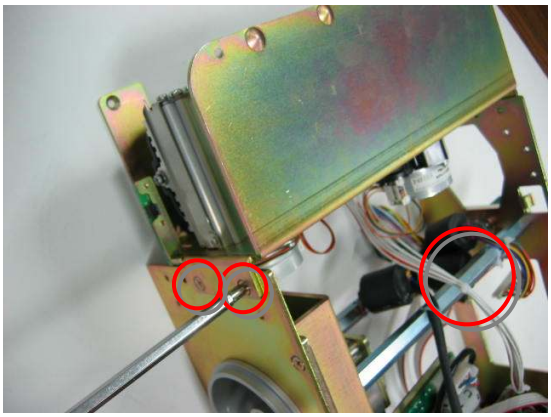

(H type)

NOTE: You must remove center collom first

5) Remove printer module (lift upper right side first)
6) Reference following exploed view

6.7 Display Replacement

1) Turn power off and remove power cord
2) Remove upper case (6.2)
3) Remove keyboard and display cable of main board

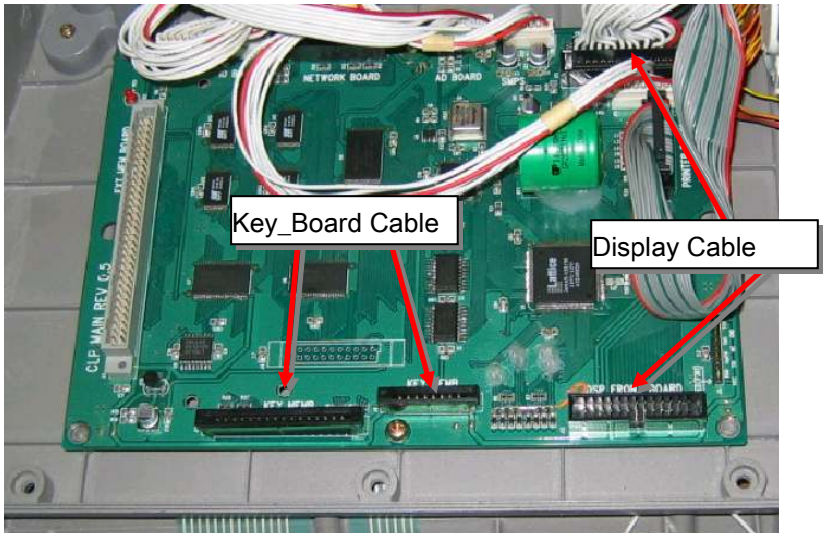

4) Remove front display board B,P,R type: lift display board at arrow side
   Remove rear display board by lifting bottom part to unlock

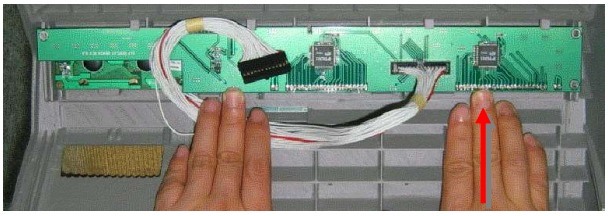

5) Remove Front, Rear display by unhook support part.

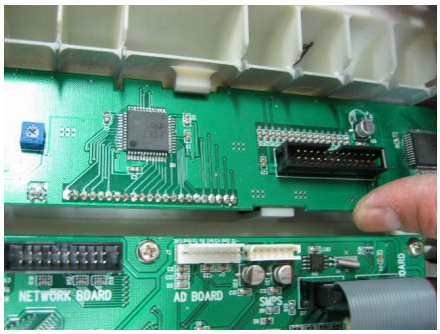

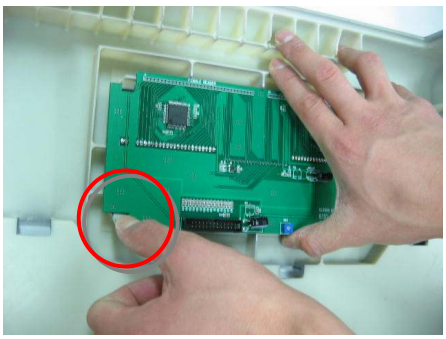

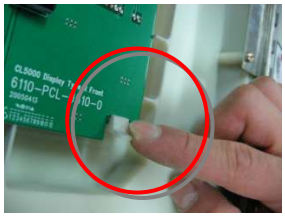

6.8 Keyboard Replacement A,B(with/without breaking sealing)

A: with break sealing

1) Turn power off and remove power cord
2) Remove upper case(6.2)
3) Remove keyboardm display cable from main bord and replace new keyboard

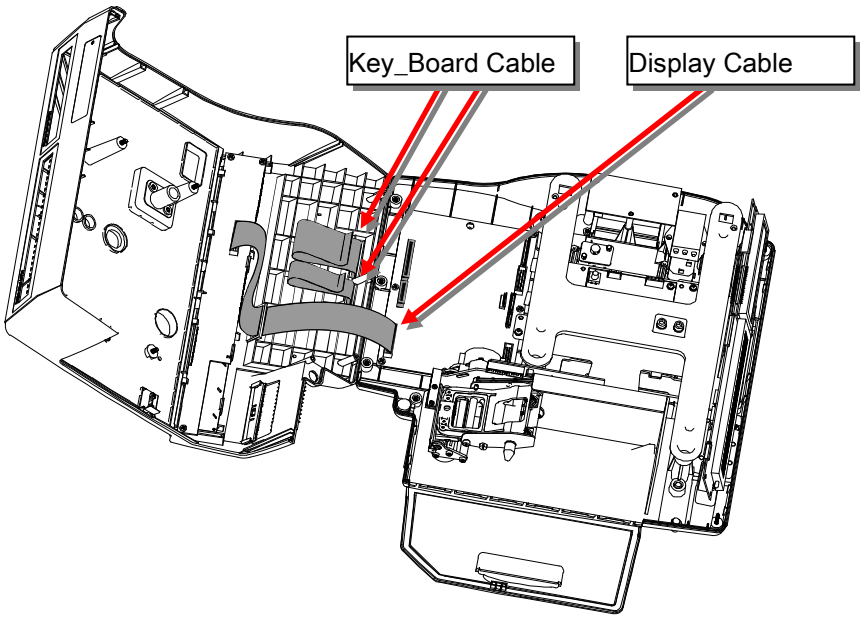

B: without break sealing

4) Remove keyboard from upper case
5) Remove keyboard support plate and disconnect key board cable by pull the calble lock
6) Connect keyboard cable by pushing keyboard suspend lock / add metal support plate
7) Stick the keyboard pad

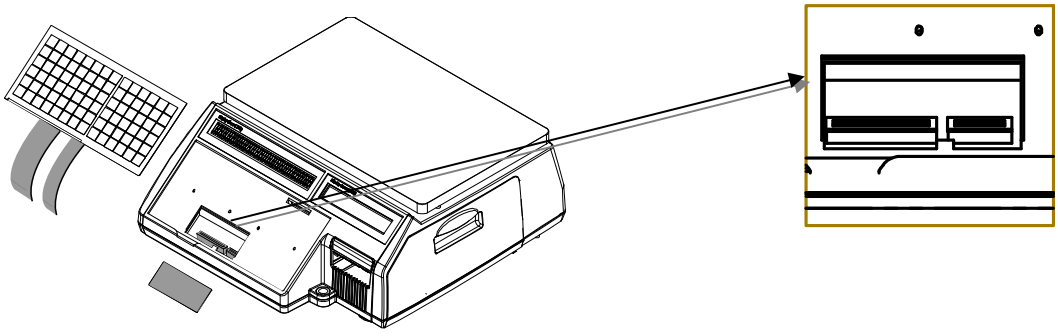

H-type

-Remove keypad cover and metal dome cover

7. Installing Options

Additional expansion memory and network card is available for ungrade

7.1 Installing Ethernet Card

1) Turn power off and remove power cord
2) Remove Ethernet card cover

3) Insert Ethernet card onto slot (use same slot for wireless module)

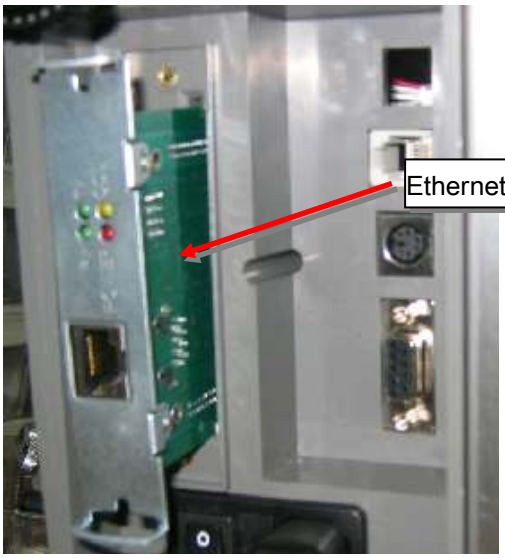

B, P, R type

H type

4) Turn on power when installation is finished
5) Set up communication configuration (menu code:1900)

7.2 Installing Wireless Lan Card

1) Turn power off and remove power cord
2) Remove Ethernet card cover
3) Insert Wireless LAN Card.
   i. Insert local wireless CF card
   ii.

4) Turn on power when installation is finished

7.3 Installing Memory Expension Card

5) Turn power off and remove power cord
6) Remove Upper Case
7) Insert Memory Expension Card.

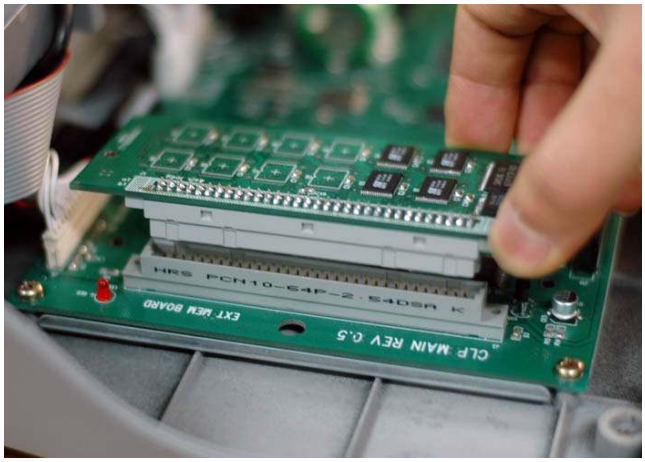

8) Turn on power when installation is finished

8. Update

8.1. F/W update

NOTE: While you are turning on the scale, you must PUSH CAL botton.

If you didn't follow this procedure, scale will not accept any signal from PC.

Step1: Connect RS232C to computer

Pin-layout is following diagram

Scale(DB-9 Female)	PC (DB-9 Male)
(2)	(3)
(3)	(2)
(5)	(5)

Step2: Play CLPfwupdate.exe

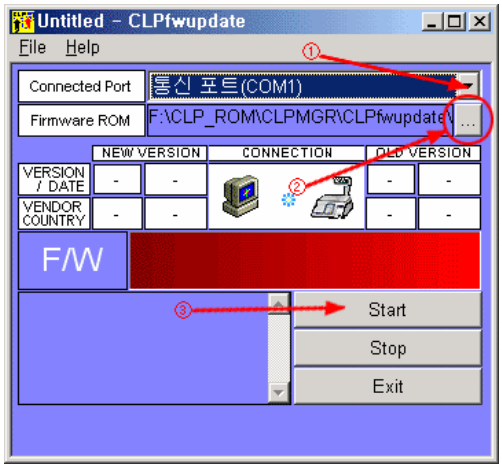

Step2: Select RS232C communication port by pressing ☐

Step3: Select new firmware ROM pressing ☐

Step4: Press , ready to F/W –ROM download

* Software will not download if the firmware version is old or file desination is wrong

Window massage will show error massage

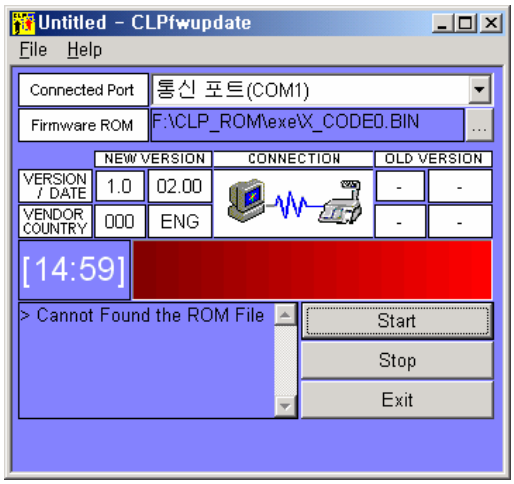

Step5: Turn off the scale to get scale ready

Step6: Turn on the scale while CAL botton is pushed. (at this point display will show “RDY”)

NOTE: If CAL botton isn’t pushed, scale will not accept any signal from PC.

After few second download process will occure

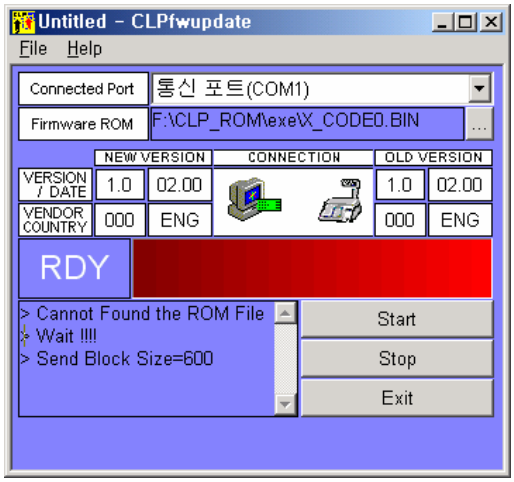

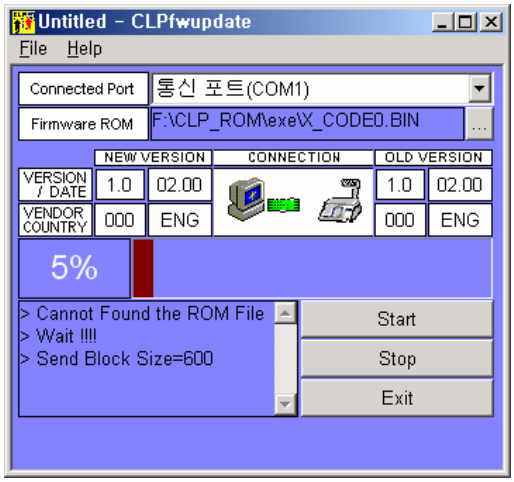

When download finish scale will reboot

NOTE: During this procedure power or communication connector is cut off

You must redo from step1

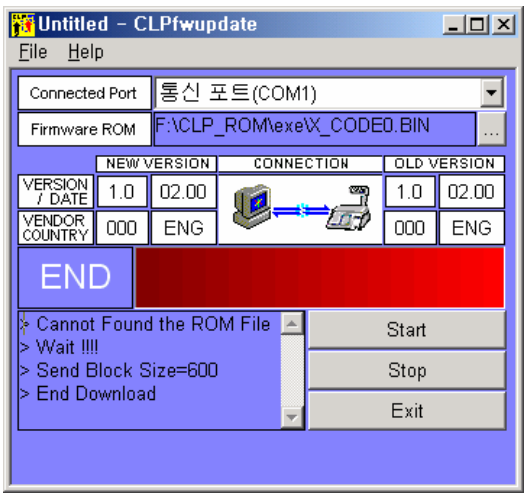

9. Schematic & Diagrams

9.1 System Block Diagram

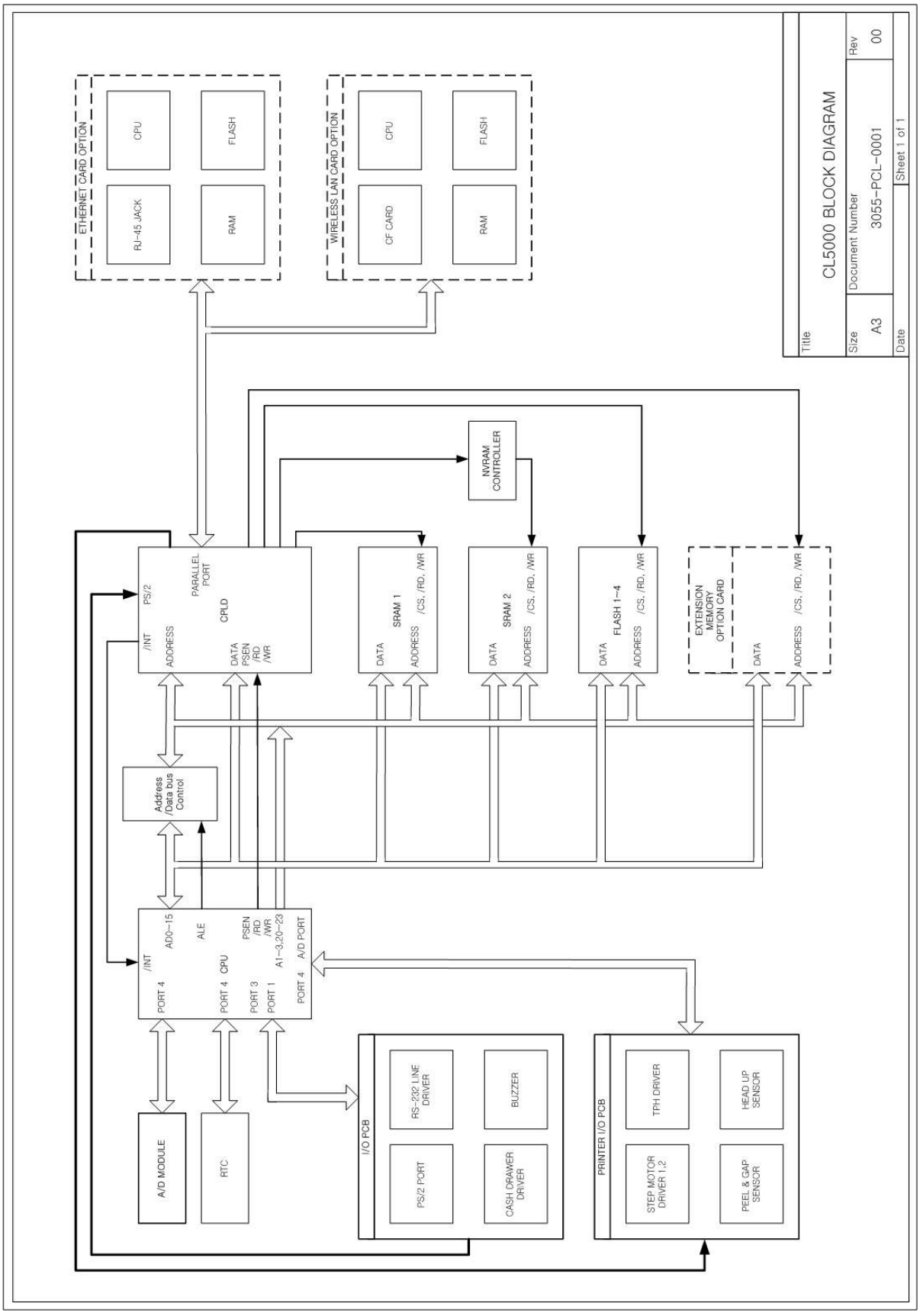

9.2 Connection Diagram

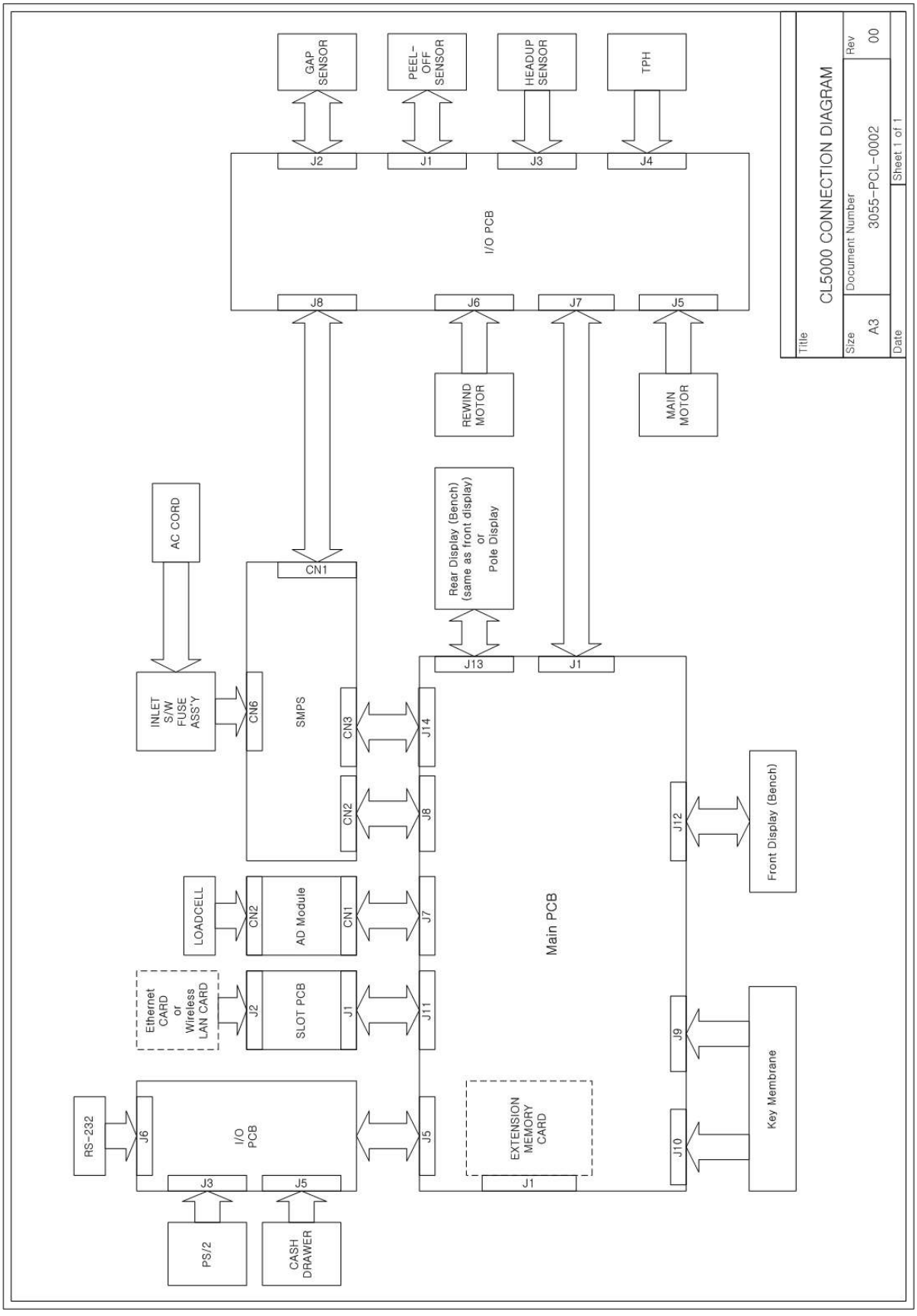

9.3 I/O Pin Connection

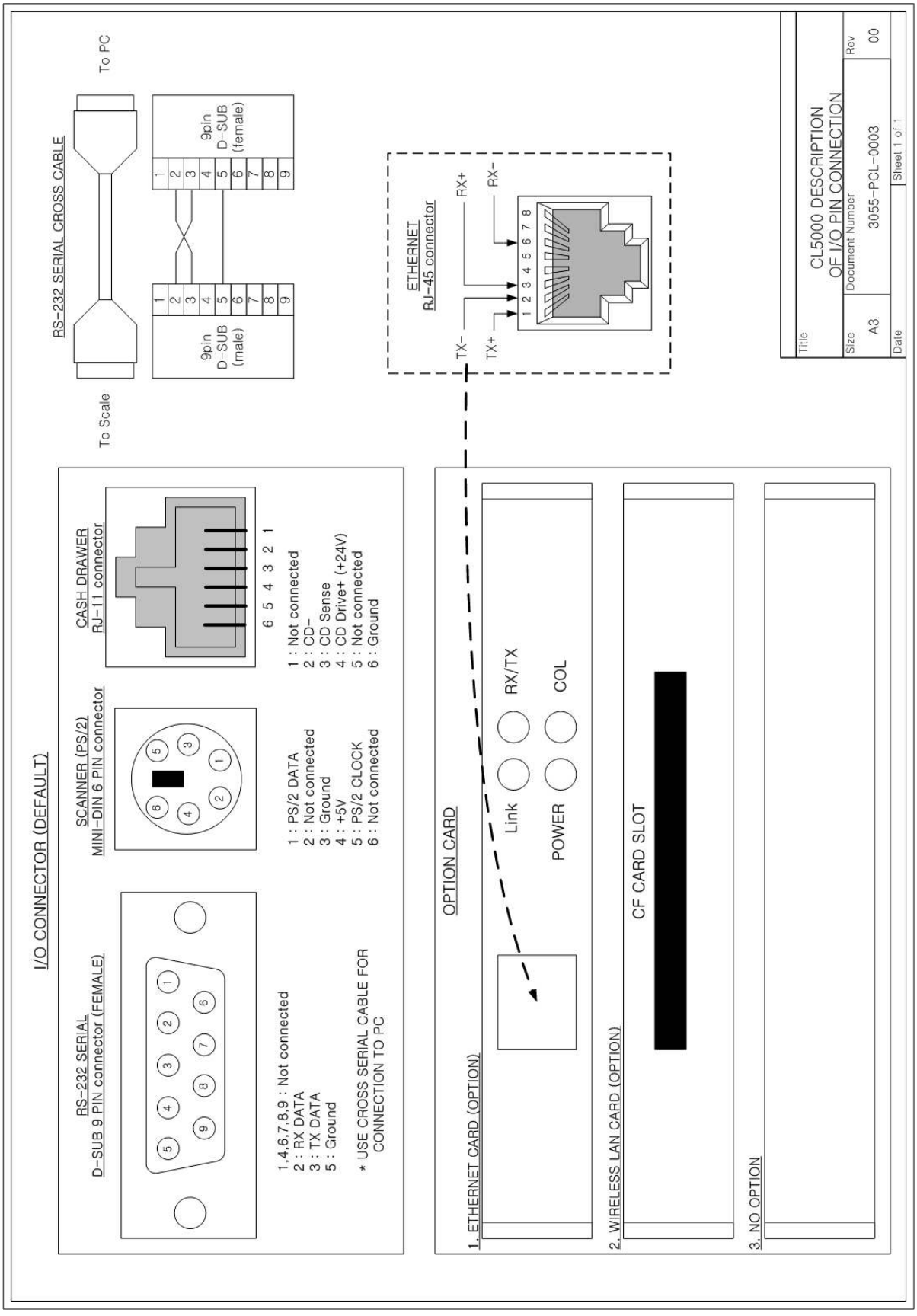

9.4 Main PCB

1) part 1

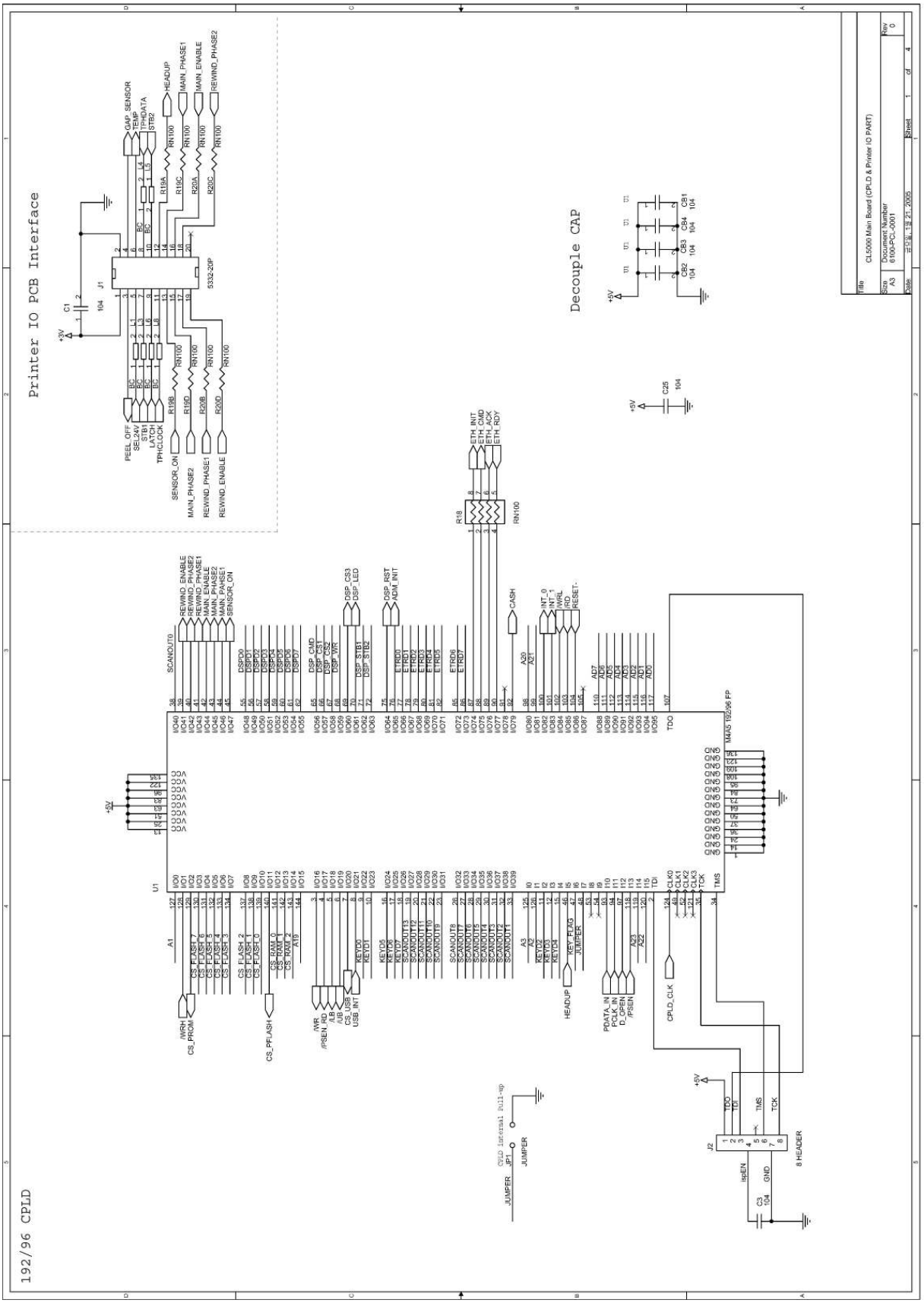

2) part 2

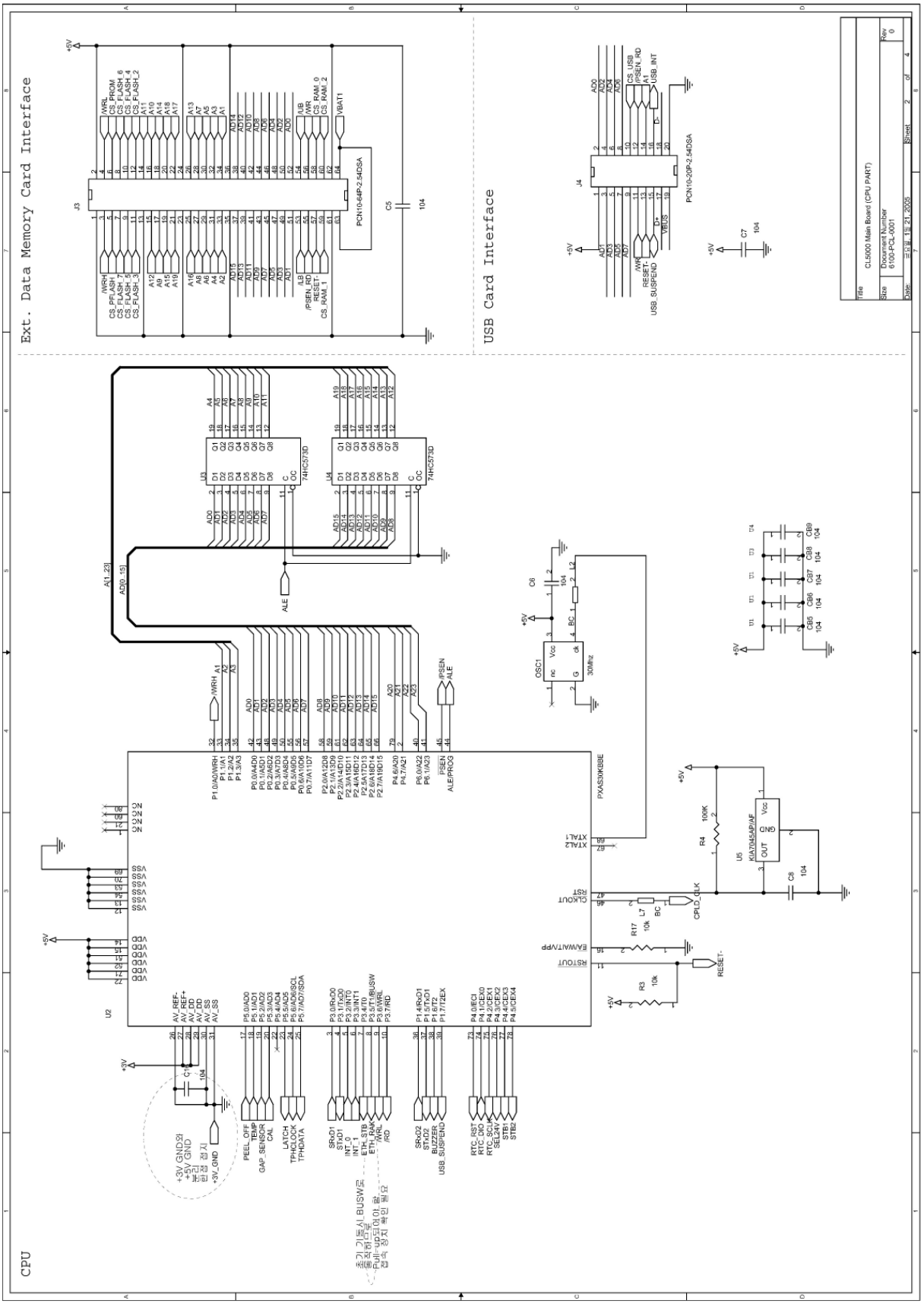
Ext. Data Memory Card Interface
USB Card Interface
CPU
PCN10-64P-2.54DSA
PCN10-20P-2.54DSA
74HC573D
PXA530KBBE
KIA7045AP/AF
30Mhz
CL5000 Main Board (CPU PART)

3) part3

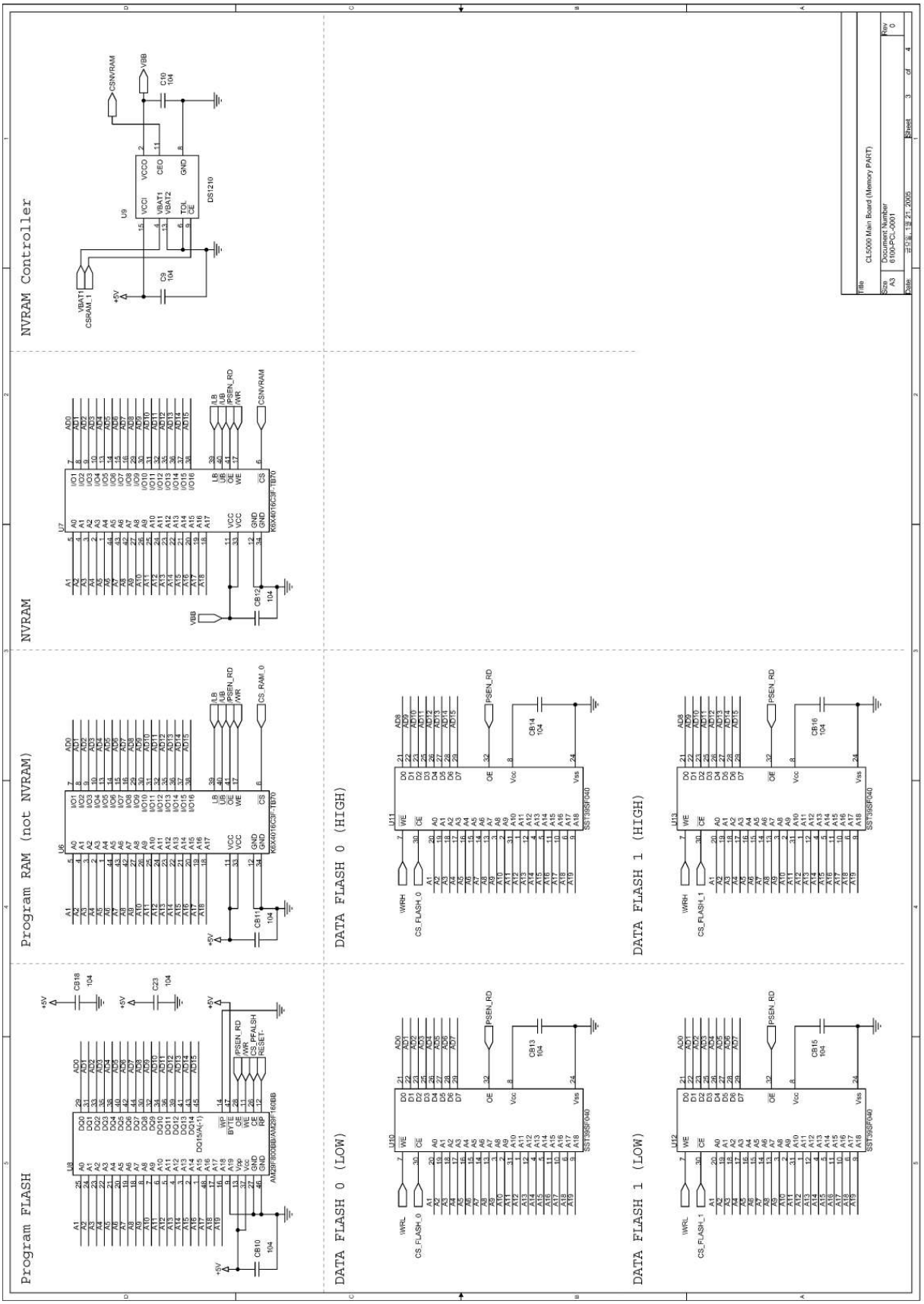
Program FLASH
Program RAM (not NVRAM)
NVRAM
NVRAM Controller
DATA FLASH 0 (LOW)
DATA FLASH 0 (HIGH)
DATA FLASH 1 (LOW)
DATA FLASH 1 (HIGH)
CL5000 Main Board (Memory PART)
Document Number
6100-PCL-0001

4) part4

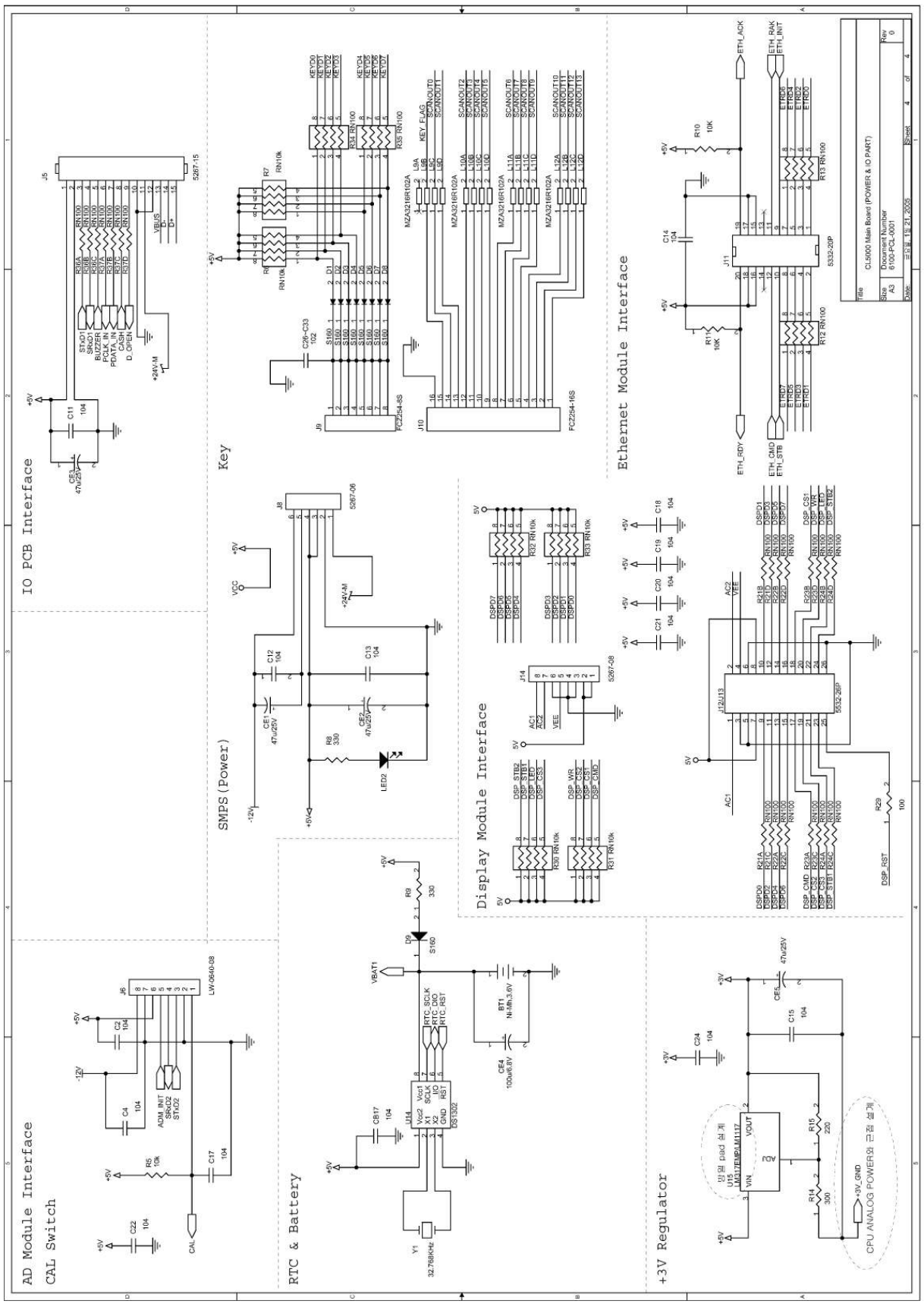
IO PCB Interface
Key
Ethernet Module Interface
SMPS(Power)
Display Module Interface
AD Module Interface
CAL Switch
RTC & Battery
+3V Regulator
CPU ANALOG POWER와 근접 설계
CL5000 Main Board(POWER & IO PART)

9.5 A/D PCB

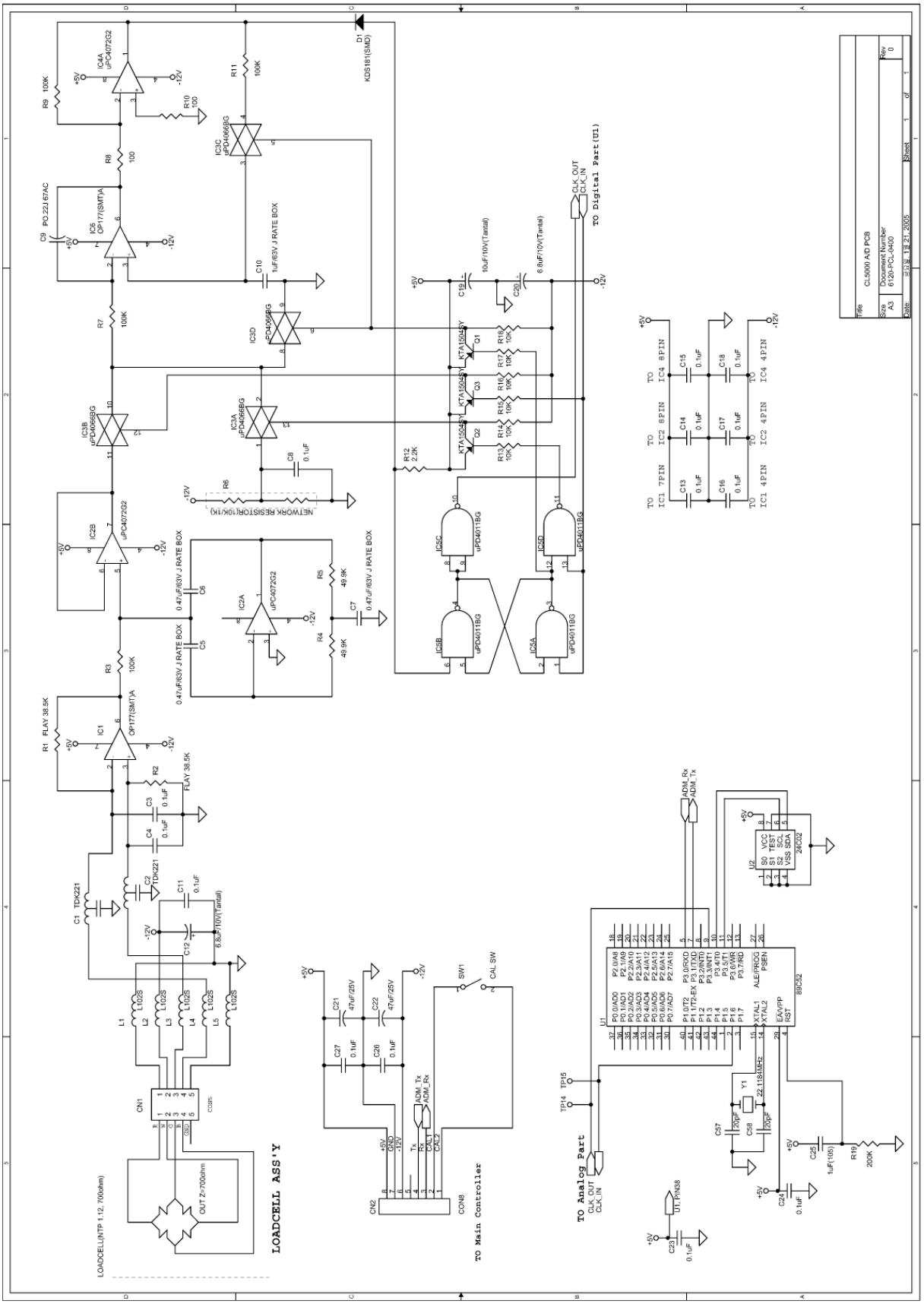

LOADCELL ASS'Y
TO Main Controller
TO Analog Part
TO Digital Part(U1)
CL5000 A/D PCB
Document Number
6120-PCL-0400

9.6 Display PCB

1) Display Type B

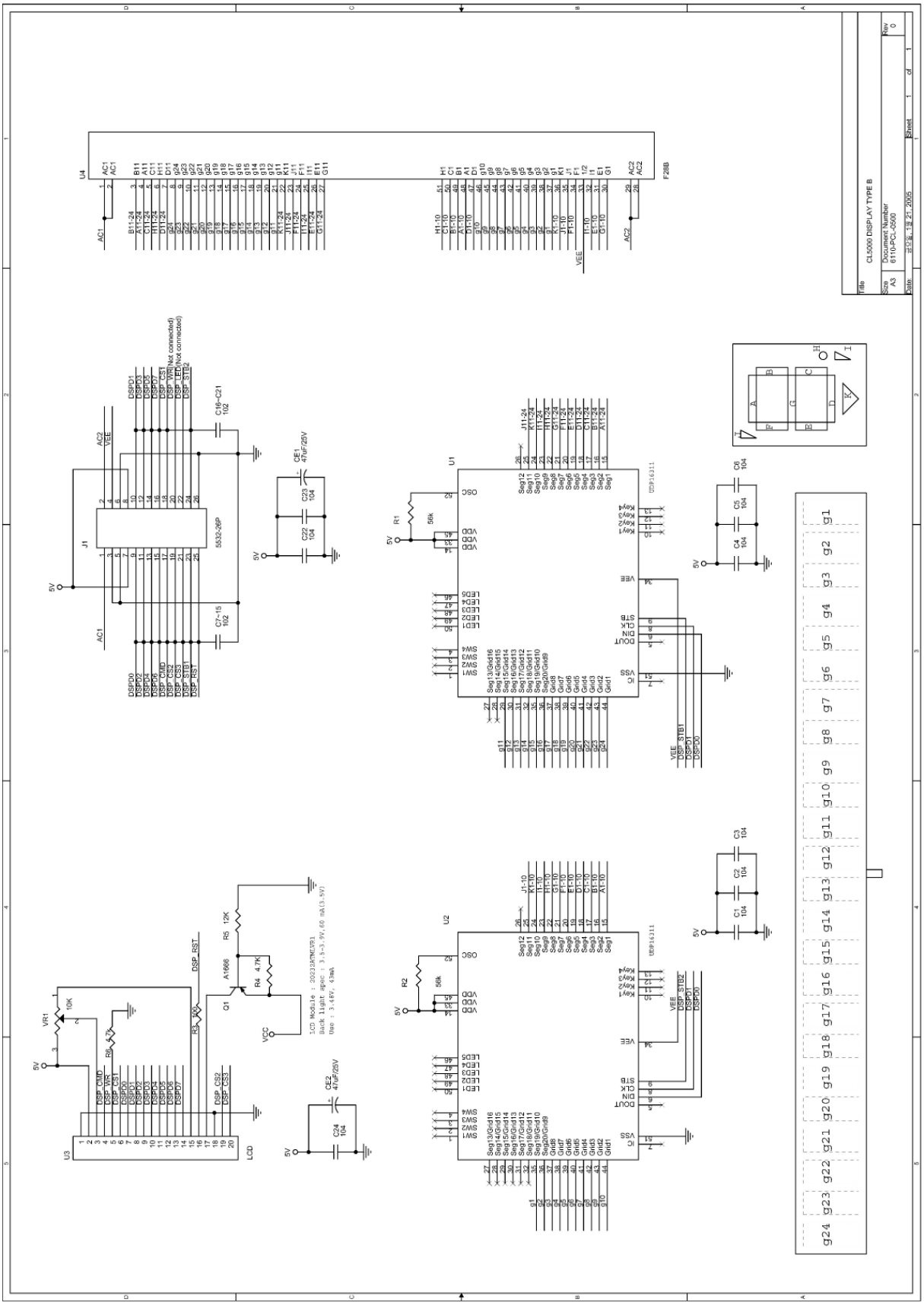

2) Display Type P (Front)

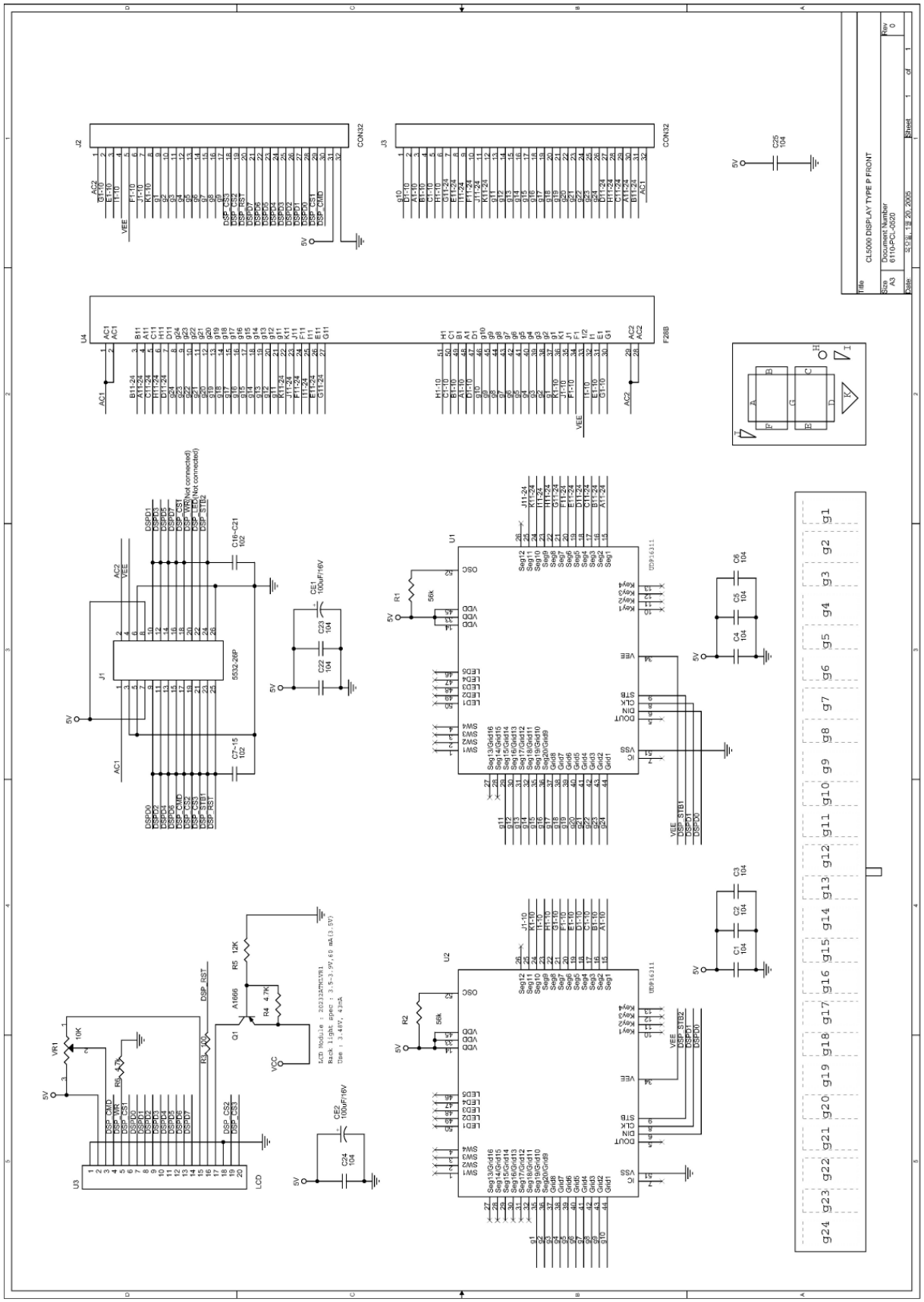

3) Display Type P (Rear)

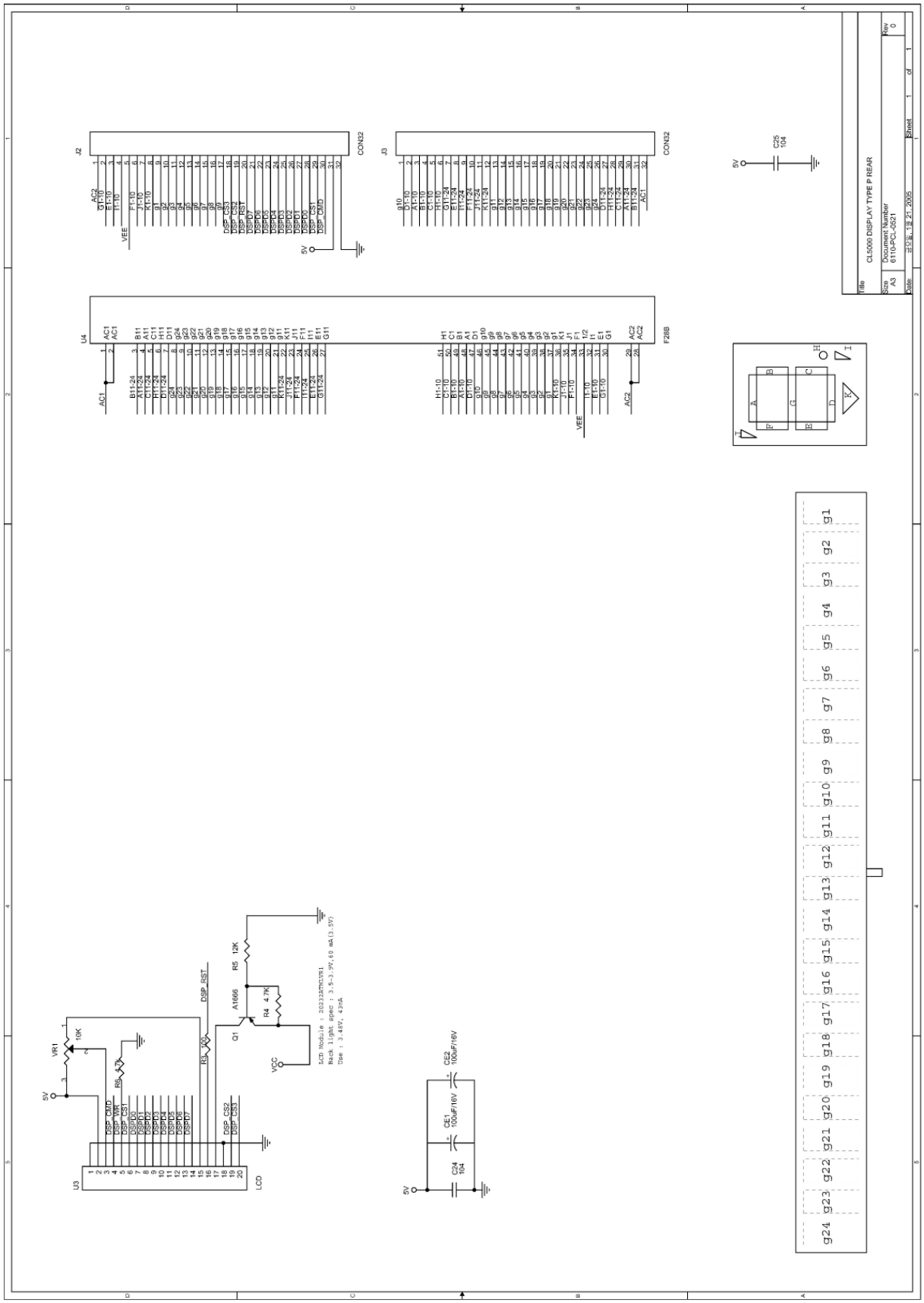

4) Display Type R (Front)

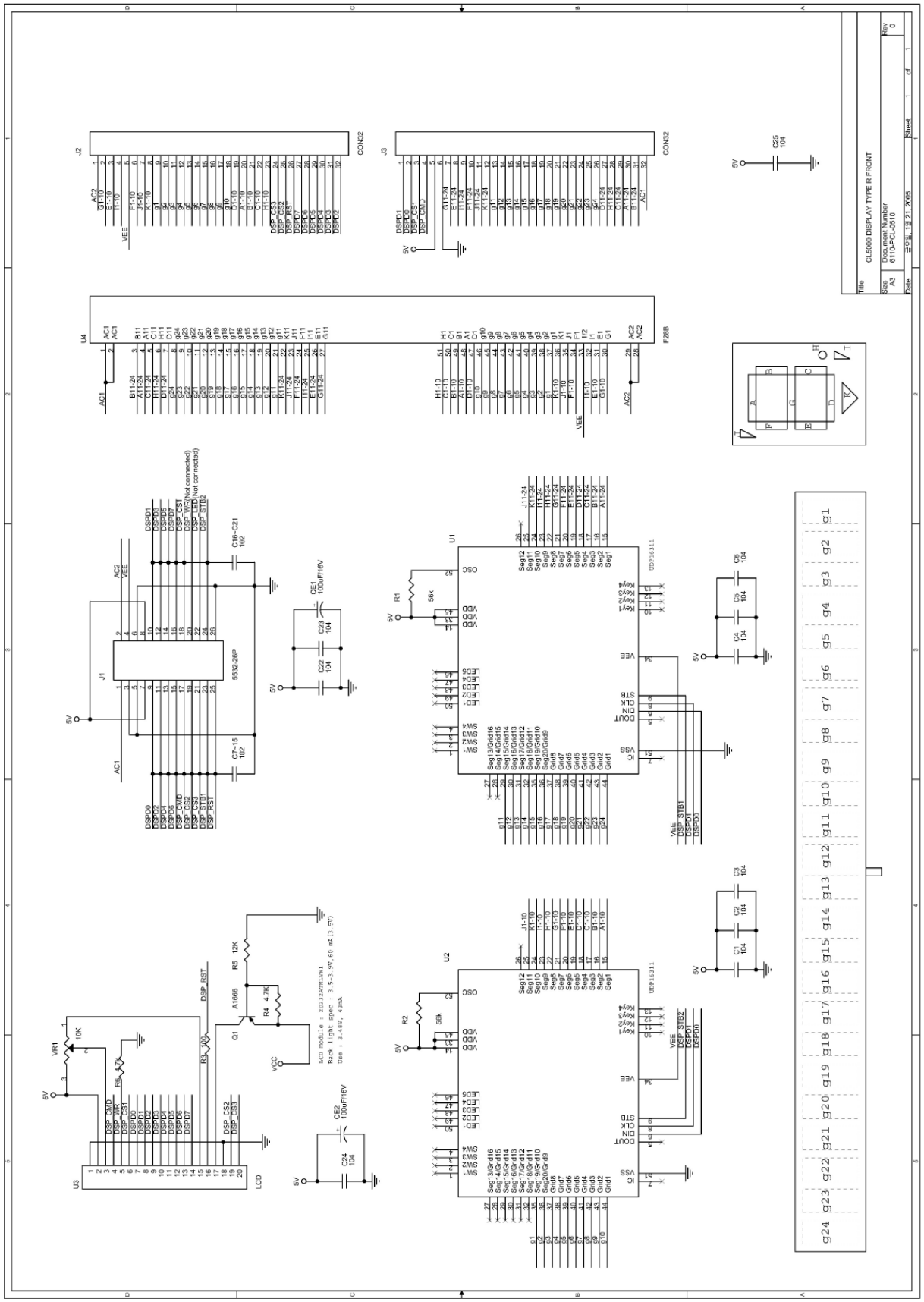

5) Display Type R (Rear)

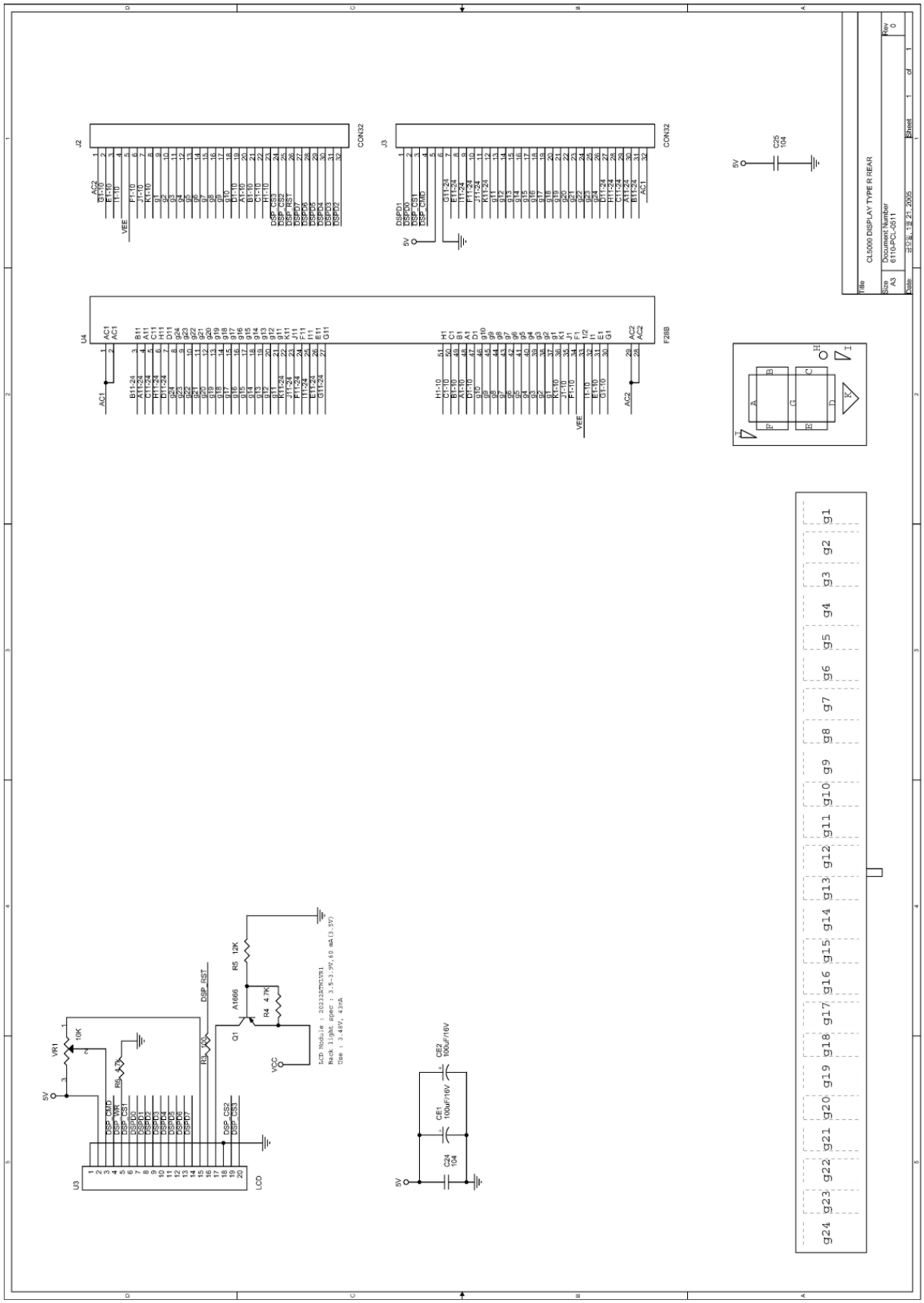

9.7 I/O PCB

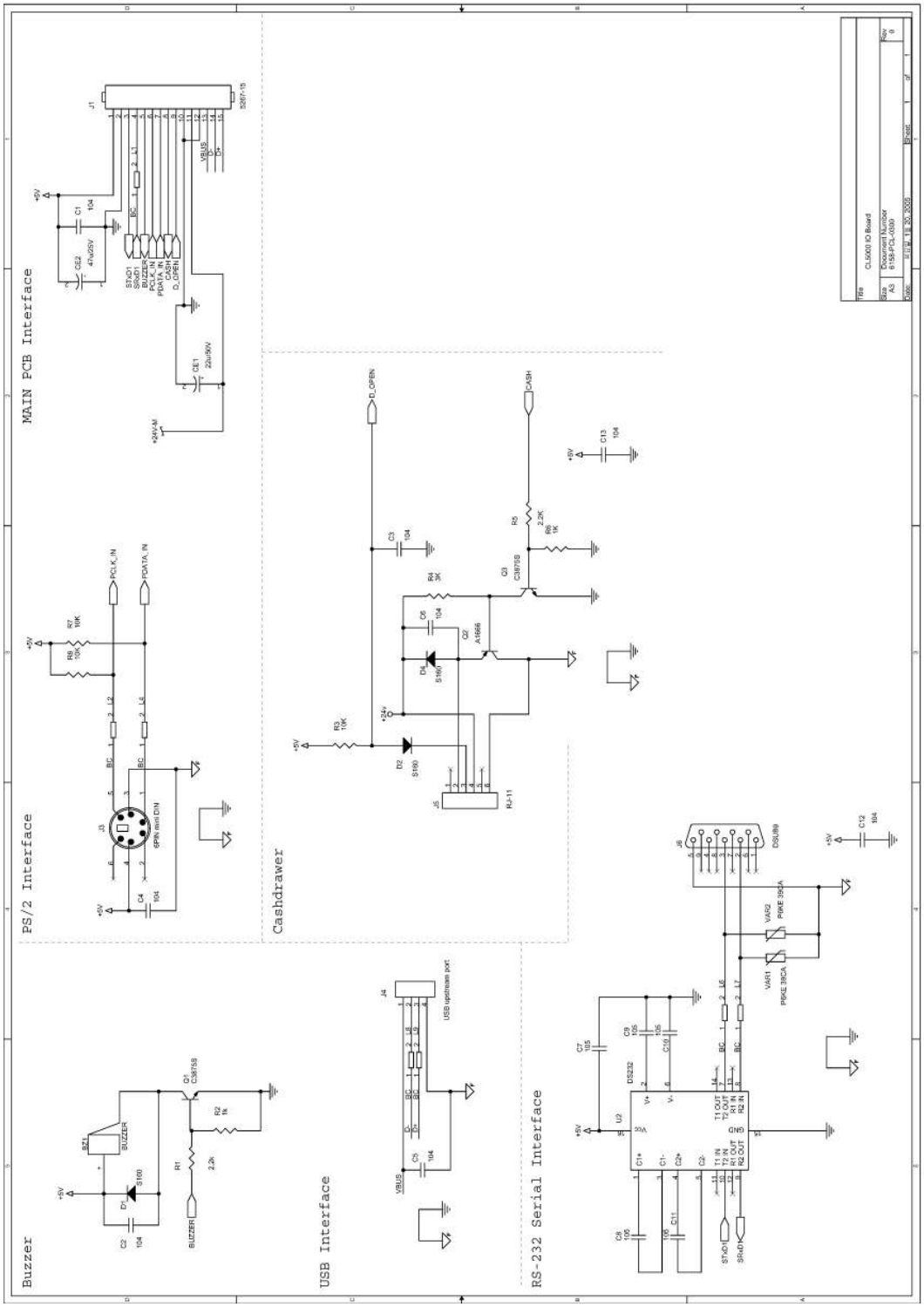
MAIN PCB Interface
PS/2 Interface
Cashdrawer
Buzzer
USB Interface
RS-232 Serial Interface
CL5000 IO Board

9.8 Printer I/O PCB

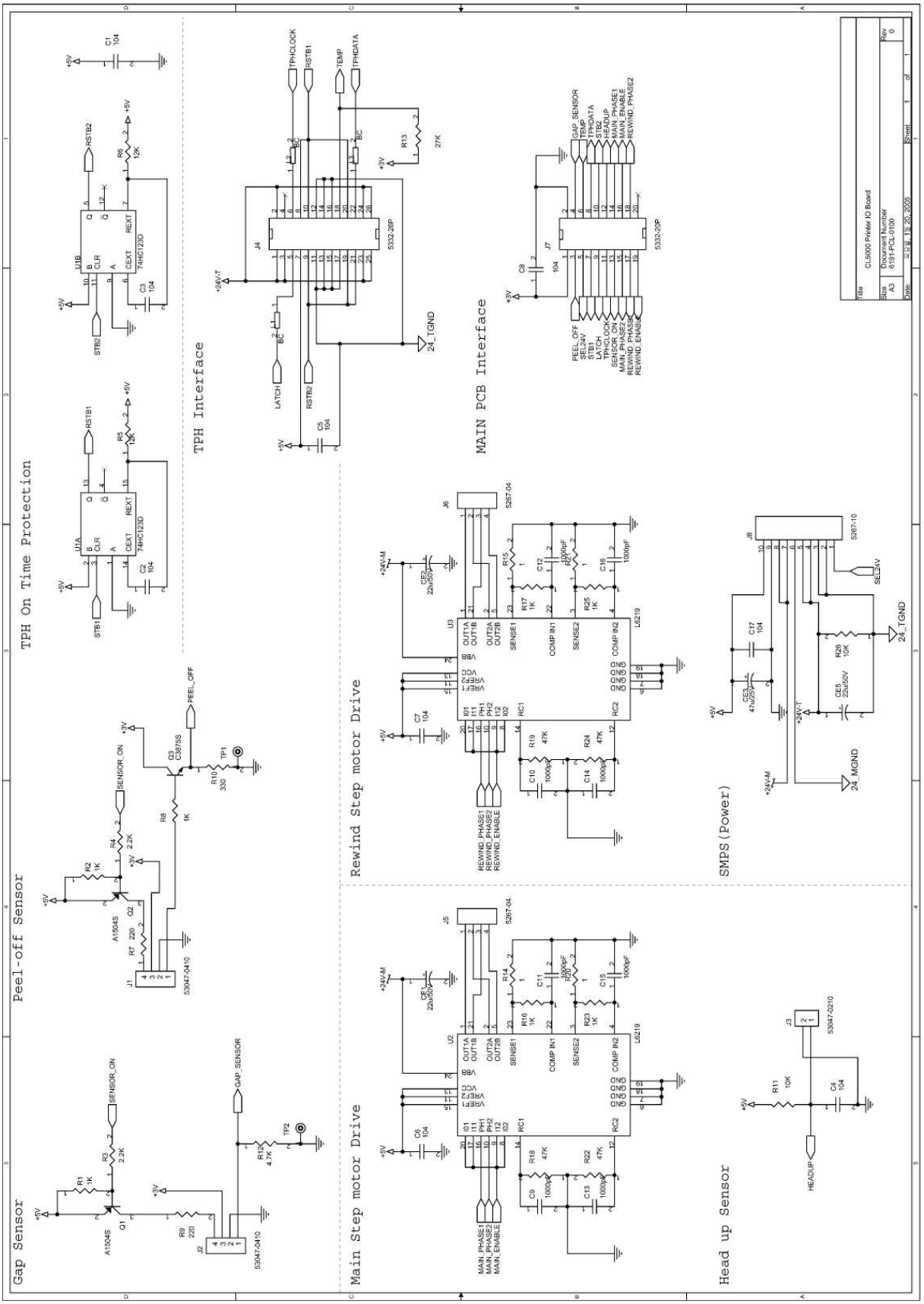

9.9 Slot PCB

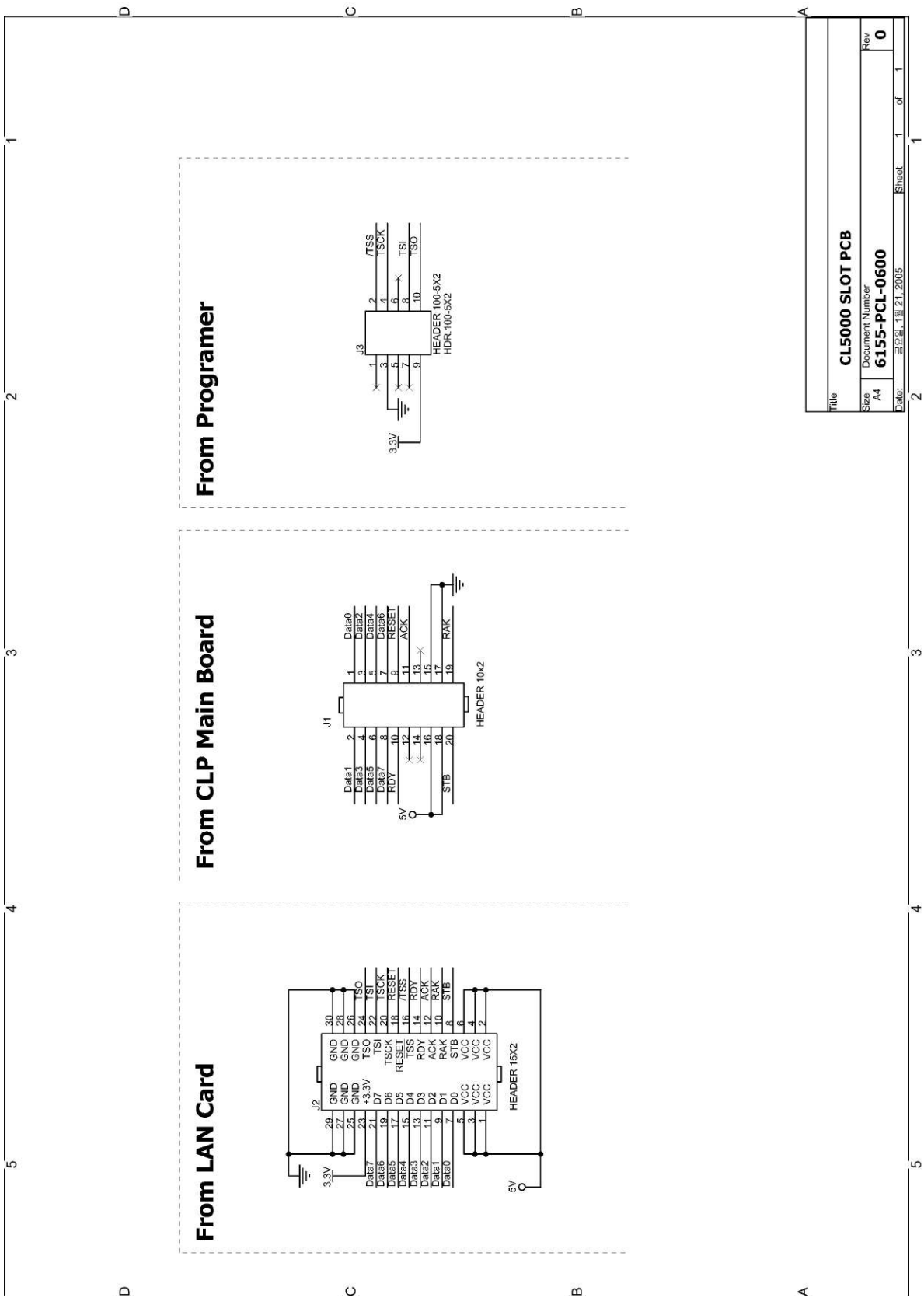
From LAN Card
From CLP Main Board
From Programer
J2
HEADER 15X2
J1
HEADER 10x2
J3
HEADER.100-5X2
HDR.100-5X2
3.3V
5V
Title
CL5000 SLOT PCB
Size
A4
Document Number
6155-PCL-0600
Rev
0
Date:
Sheet 1 of 1

9.10 Extension Memory PCB

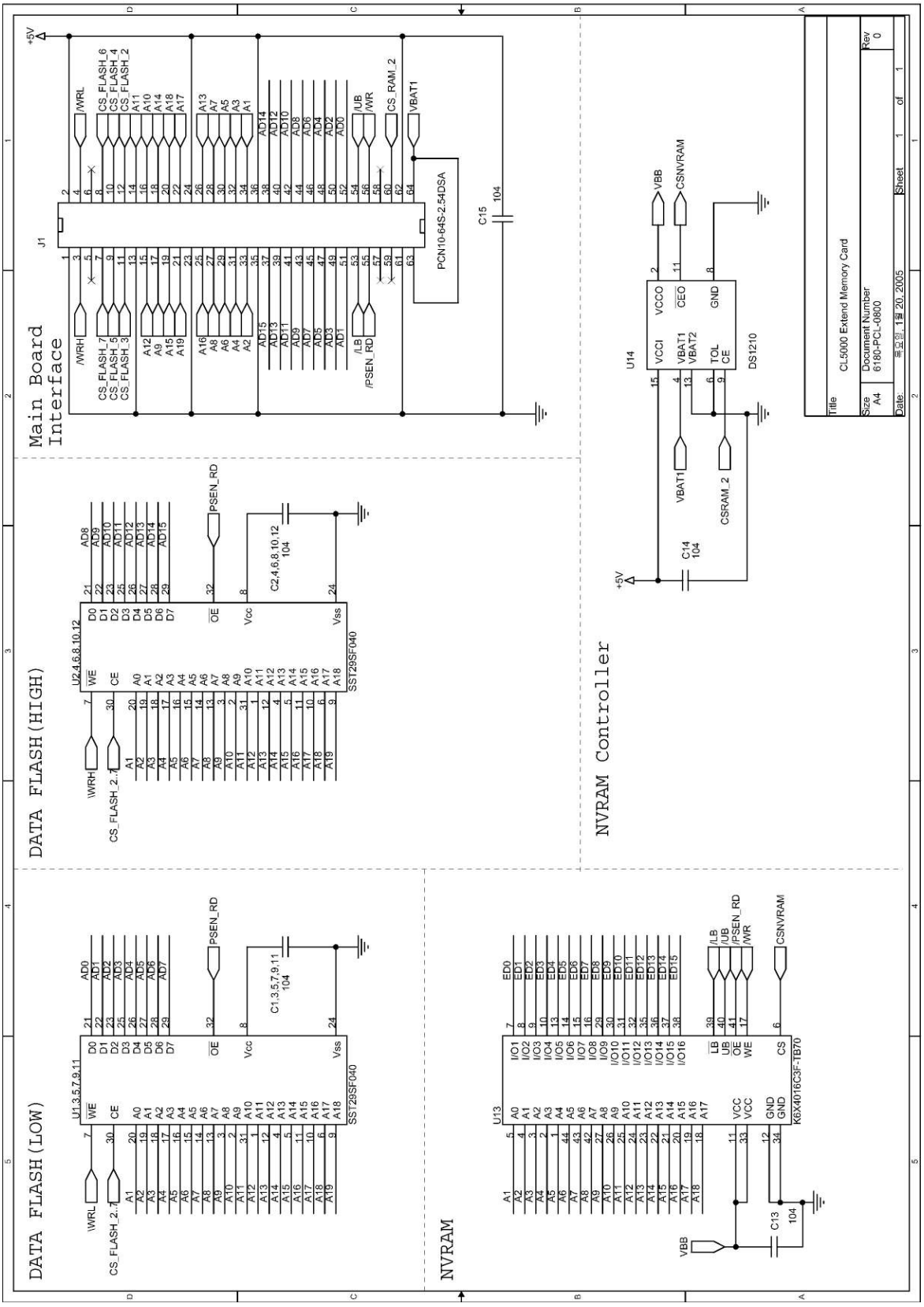

9.11 Wired LAN PCB

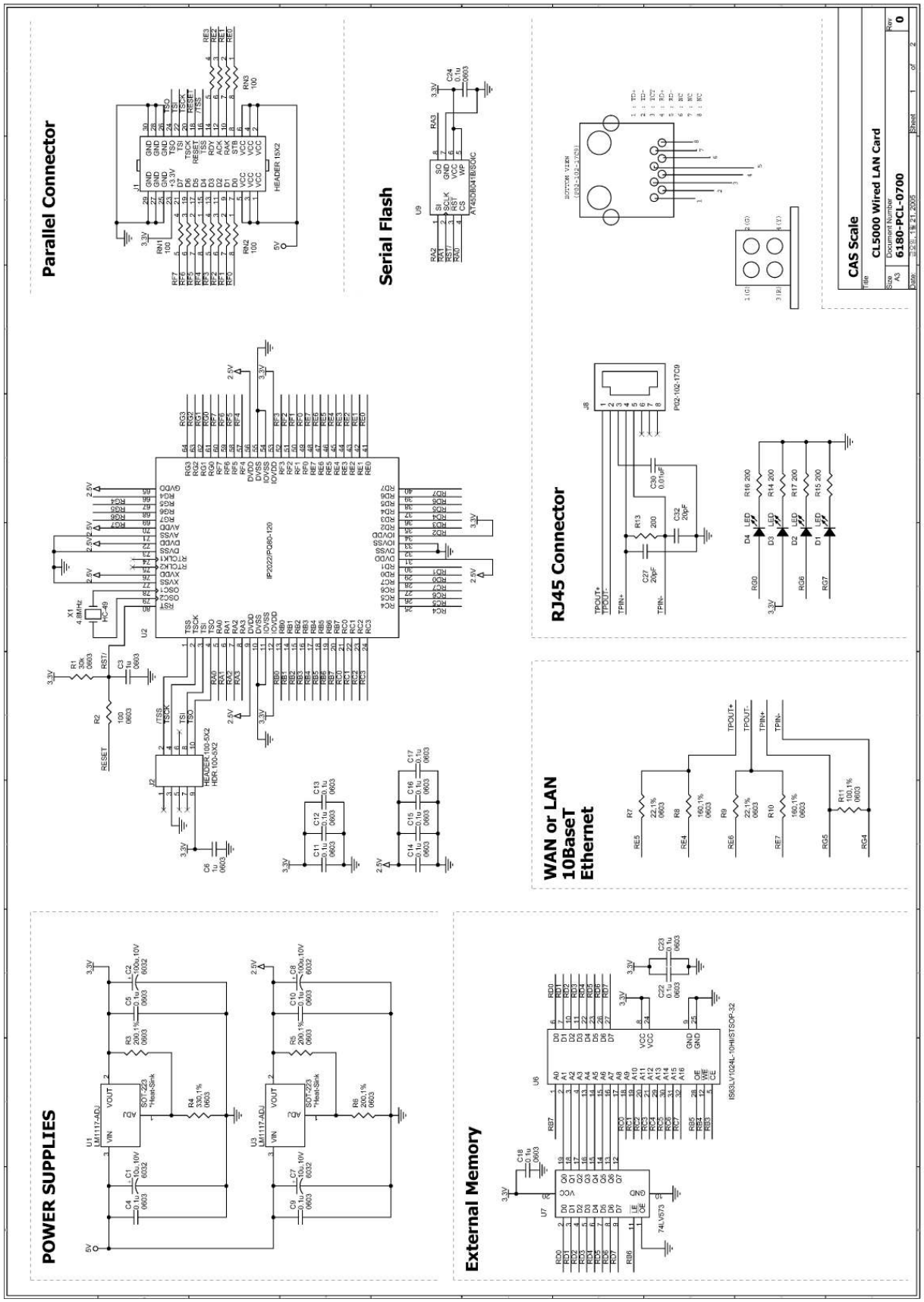

9.12 Wireless LAN PCB

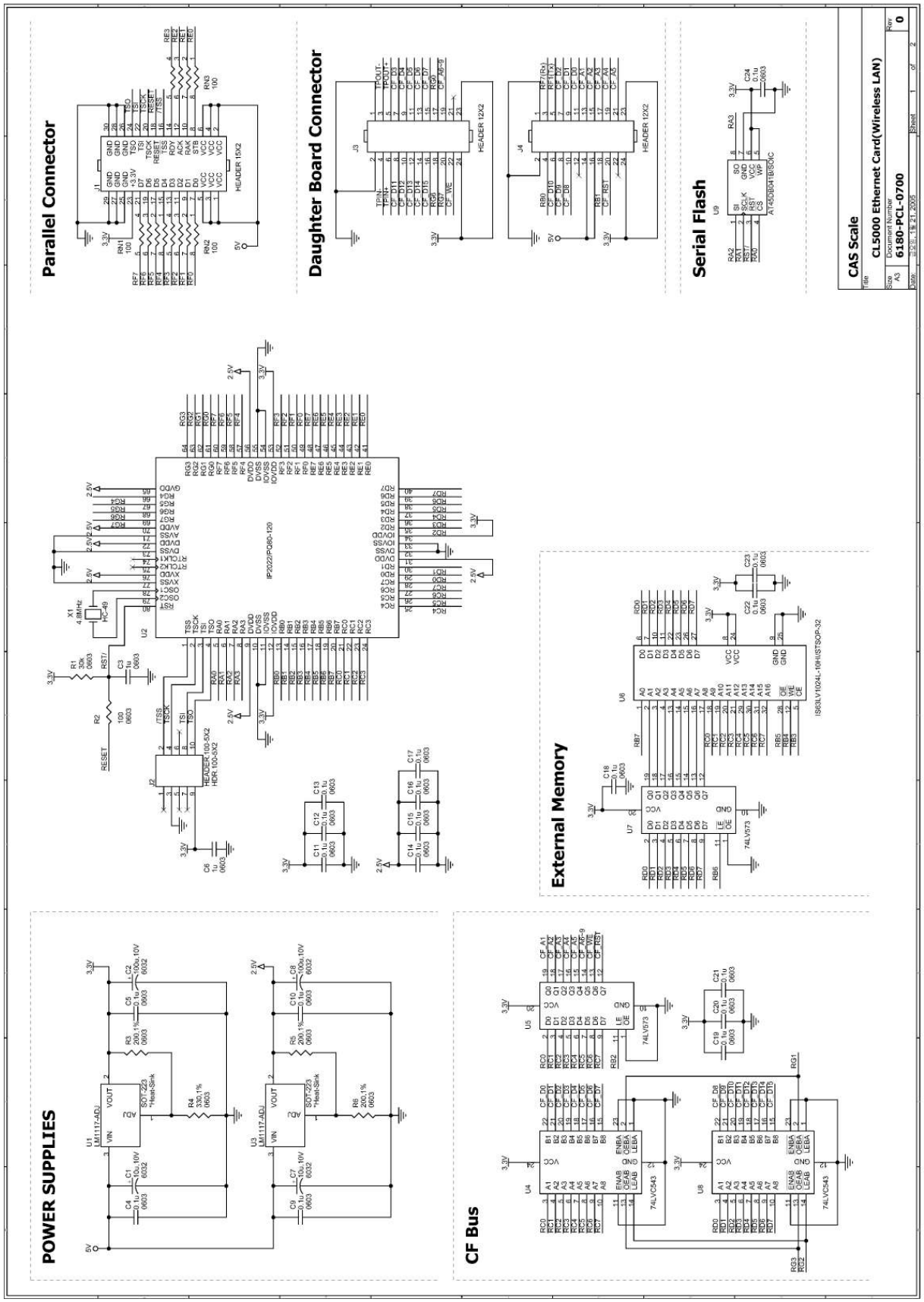

9.13 CF Card PCB

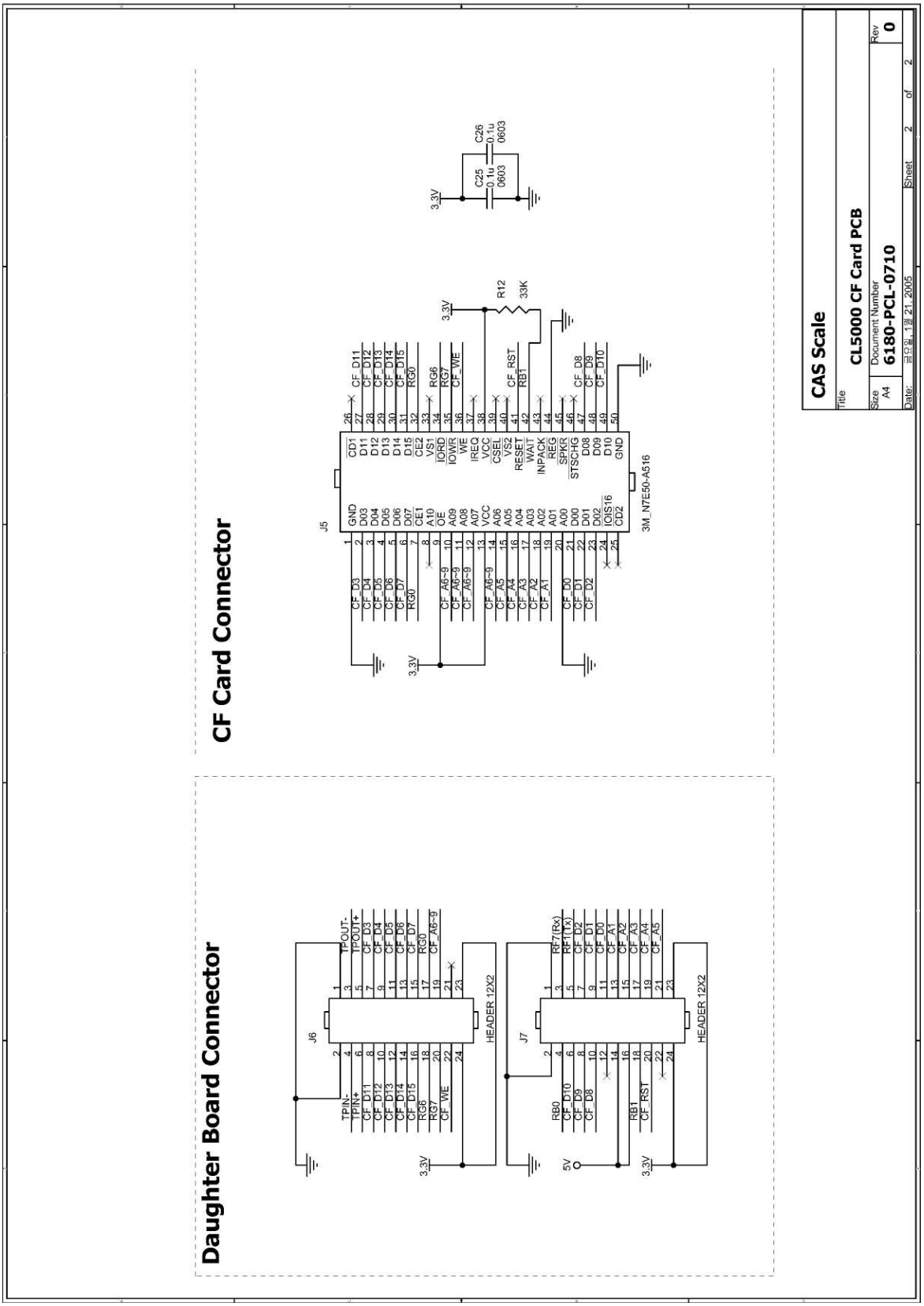

10. Exploded Views

10.1 Scale Assy

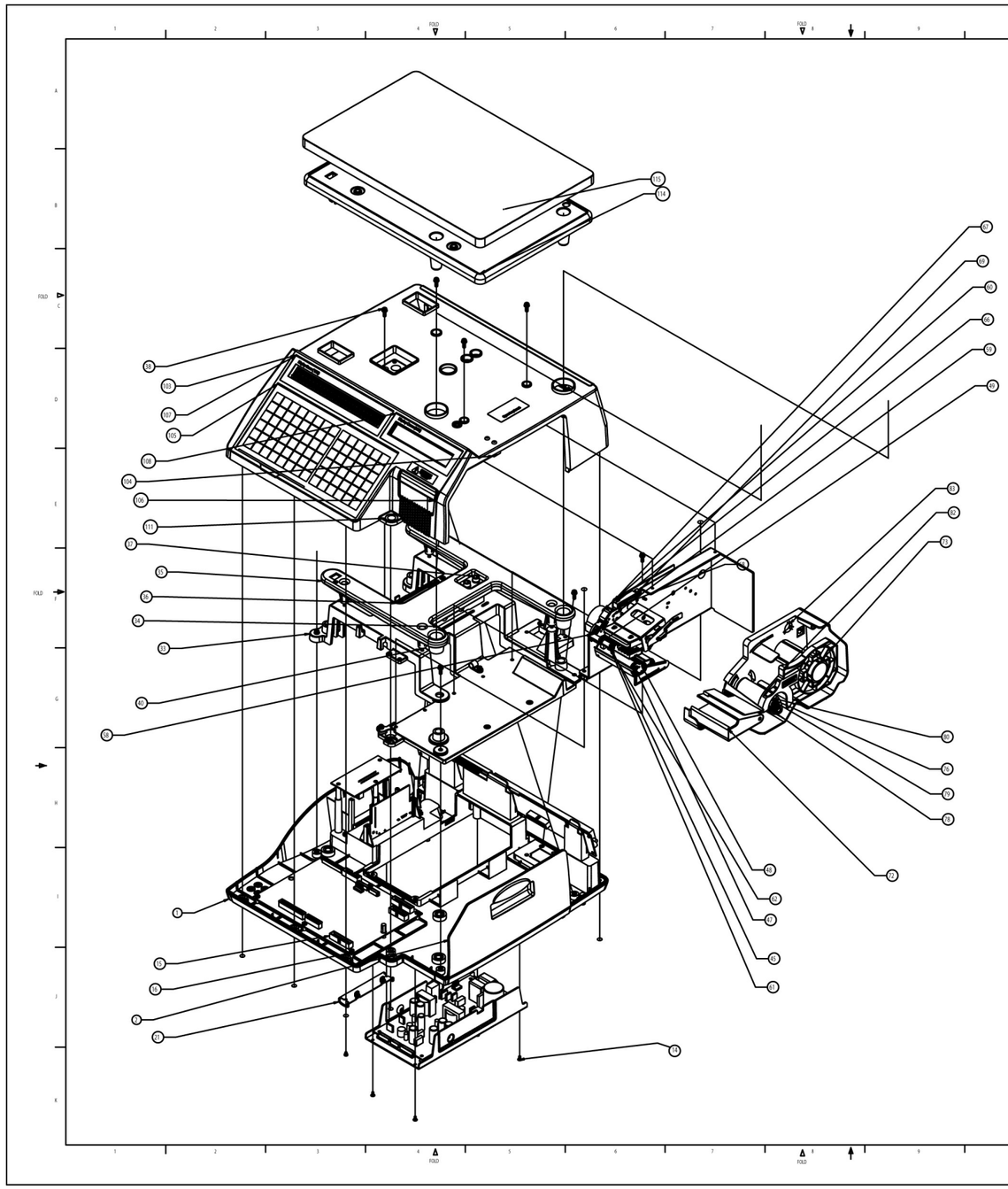

No.	Number	Description	Material	Spec	Qty
1	2004-A00-0088	BODY	ABS(?~)	CL5000 432*408*113	1
2	2004-A00-0089	DOOR PANEL	ABS(?~)	CL5000 260*120*27	1
3	1070-A00-0001	MAGNET	N/A	15*3*4(LP-II)(N30)NI	1
14	1501-A00-0306	MACHINE SCREW (FH)	SCM	M3 * 6	5
16	1510-A00-0410	TAPPING SCREW (PH)-3	SCM	M4*10	13
20	1030-A00-0225	SLOT COVER PLATE	SPC	CL5000 96.6*20.6*26.2	1
21	1502-A00-0304	MACHINE SCREW (PH)	SCM	M3*4	2
32	1100-A00-0068	PLATFORM LOWER	AL DIE CASTING	CL5000 378*349*75	1
33	8043-LTP-006L	LOADCELL	AL,202/T4	TP-TYPE	1
35	1535-MSSI-0620	WRENCH BOLT	SUS	M6*20	4
36	1503-A00-0412	MACHINE SCREW (WPH)	SCM	WPH M4*12	16
37	1261-A00-0008	LIMIT BOLT	SCM	M5*8.5(Zn[+o.1(Sn)g)	1
38	1502-A00-0420	MACHINE SCREW (PH)	SCM	M-5 PH M4X20	4
39	7642-500-0005	CABLE CLAMP	ABS	DA-4N	1
40	1533-A00-0400	WASHER (STO)	SCM	W4	1
41	7642-500-0060	METAL CLAMP	N/A	6N	1
42	1501-A00-0408	MACHINE SCREW (FH)	SCM	M4*8	2
43	1030-A00-0220	MECHANISM BRACKET	PO	CL5000 261*111*112.6	1
44	1537-A00-0408	TAPTITE SCREW	n/a	APS_M4x8	3
45	2620-A00-0030	SHAFT SILICON RUBBER	N/A	APS ± ΔC°	1
46	1150-A00-0010	LOWER FRAME ASSY	AL	APS ± ΔC°	1
47	1210-A00-0095	SHAFT BUSHING	BSSM-2	APS ± ΔC°	1
49	1537-A00-0415	TAPTITE SCREW	n/a	APS_M4 x 15	3
50	2011-A00-0014	SPUR GEAR	ACETAL	APS OD: 9.5 M: 0.5	1
51	1561-MSSI-0300	E-Ring	SUS	O*S*O*T0.6	1
52	1210-A00-0094	SHAFT BEARING	SUS 304	CL5000 ß7*37	1
53	2011-A00-0013	BUSHING BEARING	ACETAL	CL5000 ß28*15.5	1
54	1561-MSSI-0400	E-Ring	SUS	O*4*O*T0.6-SUS	2
55	2011-A00-0015	SPUR GEAR	ACETAL	APS OD: 29.4 M: 0.5	1
56	6450-TMT-0001	NMB MOTOR ASS'Y	n/a	APS PM42M-048-XXXX	1
57	1502-A00-0320-0	SCREW-MACHINE(PH)	n/a	M3*20	2
58	1551-A00-0300	WASHER(SPR)	n/a	ß3	4
59	PPP-CLP-EPSP	Pinthoff Sensor PCB Ass'y	n/a	CLP 49*18*1.5	1
62	1502-A00-0306	MACHINE SCREW (PH)	SCM	M3*6	5
63	2010-A00-0001-00	GAP SENSOR ASS'Y		CLP	1
64	PPP-CLP-ECTP	PRINTER PCB ASS'Y	n/a	CLP 130*60*1.6	1
70	2004-A00-0090	CARTRIDGE	ABS(?~)	CL5000 254*107*94	1
71	2004-A00-0091	ROLL PAPER FEED	ABS(Aç¼ü)	CLP ß34*81	2
72	2011-A00-0012	REWIND GUIDE	ACETAL	CL5000 ß42*71	1
73	2620-A00-0029	SILICONE WASHER	SILICONE RUBBER	CL5000 ß17*1.5	1
74	2004-A00-0092	REWIND PAPER	ABS(?~)	CLP ß33.5*69	1
75	1590-A00-0390	SPRING	SUS304	CL5000 13.5 * 1.0 * 45	1
76	2021-A00-0010	REWIND WASHER	PET	CL5000 ß18*0.5t	1
77	1000-A00-0218	STOPPER WASHER	SUS	CL5000 ß18*1.2t	1
78	2010-A00-0028	REWIND PAPER LOCKER	PC	CL5000 ß29*82	1
79	1000-A00-0217	REWIND STOPPER PLATE	SUS	CL5000 ß53*0.5t	1
80	2004-A00-0093	ROLL COVER	ABS(?~)	CL5000 160*98*10	1
81	1070-A00-0003	MAGNET	N/A	CLP ß15 x 3	2
93	6410-TPN-0002	APS PRINTER MACHANISM	n/a	APS ± ΔC°	1
94	2007-A00-0003	GEAR BOX	NYLON(GLASS 25%)	APS PM42M-048-XXXX	1
95	1210-A00-0096	PIN	SUS 304	CL5000 ß24 * 12.4	2
96	2011-A00-0016	SPUR GEAR	Acetal	CL5000 OD: 21.5*M0.5	2
97	2007-A00-0004	GEAR BOX COVER	NYLON(GLASS 25%)	APS PM42M-048-XXXX	1
98	6450-TMT-0002	NMB MOTOR		APS (PM42M-048-XXXX)	1
100	2004-A00-0094	UPPER CASE	ABS(?~)	CL5000 432*408*134	1
101	1030-A00-0226	DOOR PLATE	SPC	CL5000 269*18*0.8	1
102	2100-A00-0233	MEMBRANE S/W	N/A	CL5000 (STANDARD/TOOL)	1
103	1000-A00-0219	PAPER CUTTER	SUS	CL5000 77.5*15.3	1
104	2050-A00-0631	DISPLAY COVER	MITSUBISHI_522F	CL5000 206.5*43.2*11(TOOL)	2
105	2050-A00-0632	DISPLAY COVER	Transparency PC	CL5000 141.5*43.2*11(TOOL)	2
106	1810-A00-0005	SPEC PLATE	AL 0.5t	107.6*27.6*0.5t(DB-8)	1
107	1563-A00-0308	RIVET	AL	ß63.2*8	2
108	2010-A00-0026	W/L GAGE COVER	LEXAN 0.5t	t*18.5*0.5t	1
111	2004-A00-0095	TRAY	ABS(?~)	CL5000 381*245 (ABS)	1
112	1000-A00-0216	TRAY	SUS 304	CL5000 382*264* 1t	1
113	9300-SPL-0000	CUSHION-EVA	N/A	40*40*3t(HD)OPP CPP	2
114	PART_NO	BOLT-CONNECTOR	$E^{3}_{8}U$	M4*11*6	1
115	1100-A00-0068	PLATFORM LOWER	AL DIE CASTING	CL5000 378*349*75	1
116	1100-A00-0067	PLATFORM UPPER	AL DIE CASTING	CL5000 345*215*36	1
117	1030-A00-0220	MECHANISM BRACKET	PO	CL5000 261*111*112.6	1
118		N/A	N/A	N/A	1
119	1000-A00-0216	TRAY	SUS 304	CL5000 382*264* 1t	1

TOLERANCES UNLESS OTHERWISE SPECIFIED	NAME OR TITLE	CL5000	CAS CORPORATION #10 KUMJAP-RI KWANGJEOK-MYEON YANGJU-KUN KYUNGKI-DO,KOREA		
ANGULAR: ± 1 DEG.					
DECIMAL: ± 1 DEG.	FIRST USED IN ASSEMBLY	SHOPPING SCALE	MATERIAL		
QTY/SET N/A 1	FIRST MADE FOR	CL5000	END FINISH		
	CONTRACT OR CUSTOMER NO.	WORLD WIDE	DO NOT SCALE DRAWING	DIMENSIONS ARE IN INCHES	
DRAWN	CHECKED	APPROVED	SCALE	PART NO.	REV.
			1:2.5	PPP-CLP-MTOT	0
			CAS FORM A1 (594mmx841mm)		

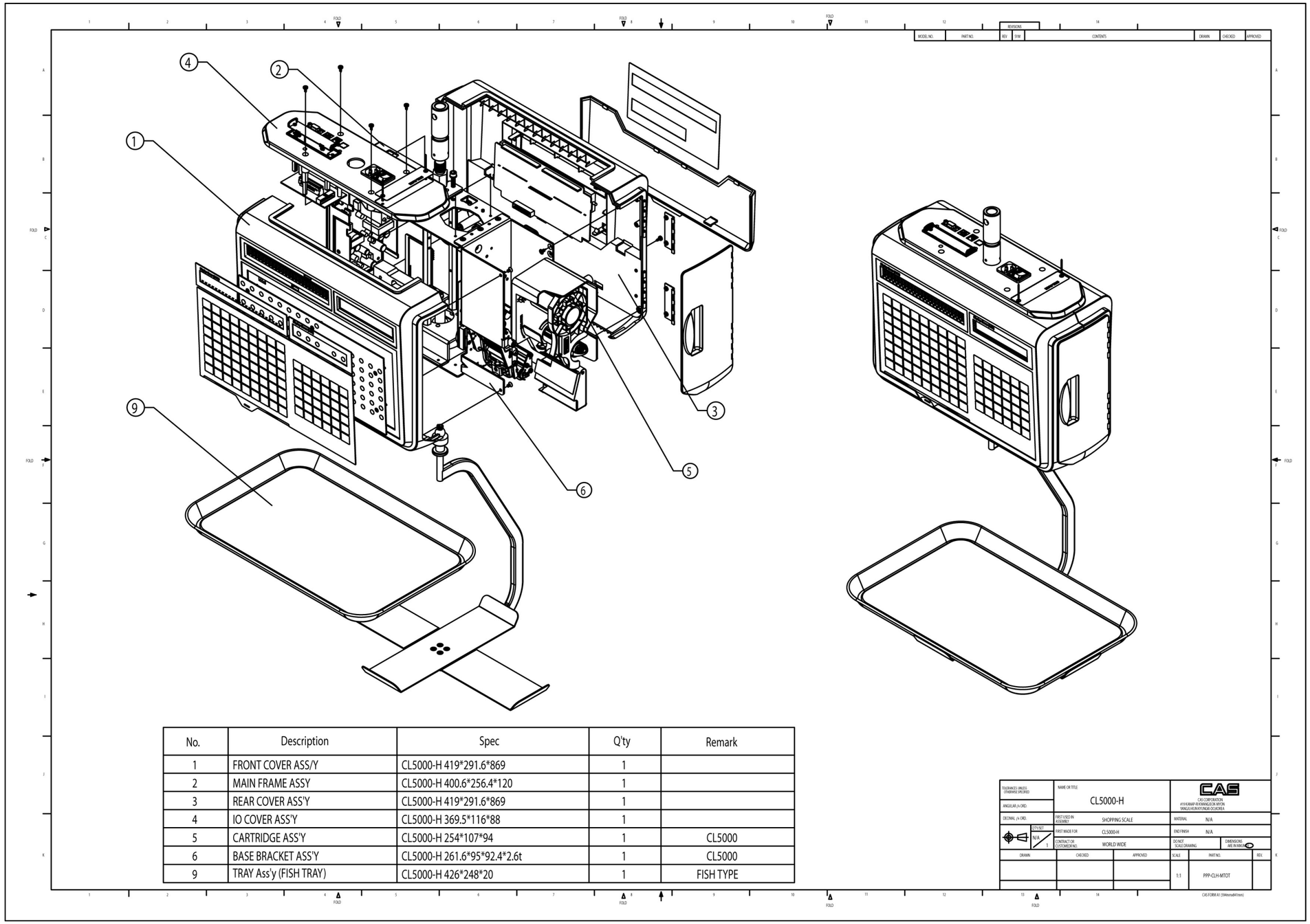

No.	Description	Spec	Q'ty	Remark
1	FRONT COVER ASS/Y	CL5000-H 419*291.6*869	1	
2	MAIN FRAME ASSY	CL5000-H 400.6*256.4*120	1	
3	REAR COVER ASS'Y	CL5000-H 419*291.6*869	1	
4	IO COVER ASS'Y	CL5000-H 369.5*116*88	1	
5	CARTRIDGE ASS'Y	CL5000-H 254*107*94	1	CL5000
6	BASE BRACKET ASS'Y	CL5000-H 261.6*95*92.4*2.6t	1	CL5000
9	TRAY Ass'y (FISH TRAY)	CL5000-H 426*248*20	1	FISH TYPE

NAME OR TITLE: CL5000-H		CAS CORPORATION	
FIRST USED IN ASSEMBLY: SHOPPING SCALE		MATERIAL: N/A	
FIRST MADE FOR: CL5000-H		END FINISH: N/A	
CONTRACT OR CUSTOMER NO.: WORLD WIDE		DO NOT SCALE DRAWING	DIMENSIONS ARE IN mm
DRAWN	CHECKED	APPROVED	SCALE: 1:1
			PART NO.: PPP-CLH-MTOT

10.2 Body Assy

MODEL NO.	PART NO.	REVISIONS REV	SYM	CONTENTS	DRAWN	CHECKED	APPROVED

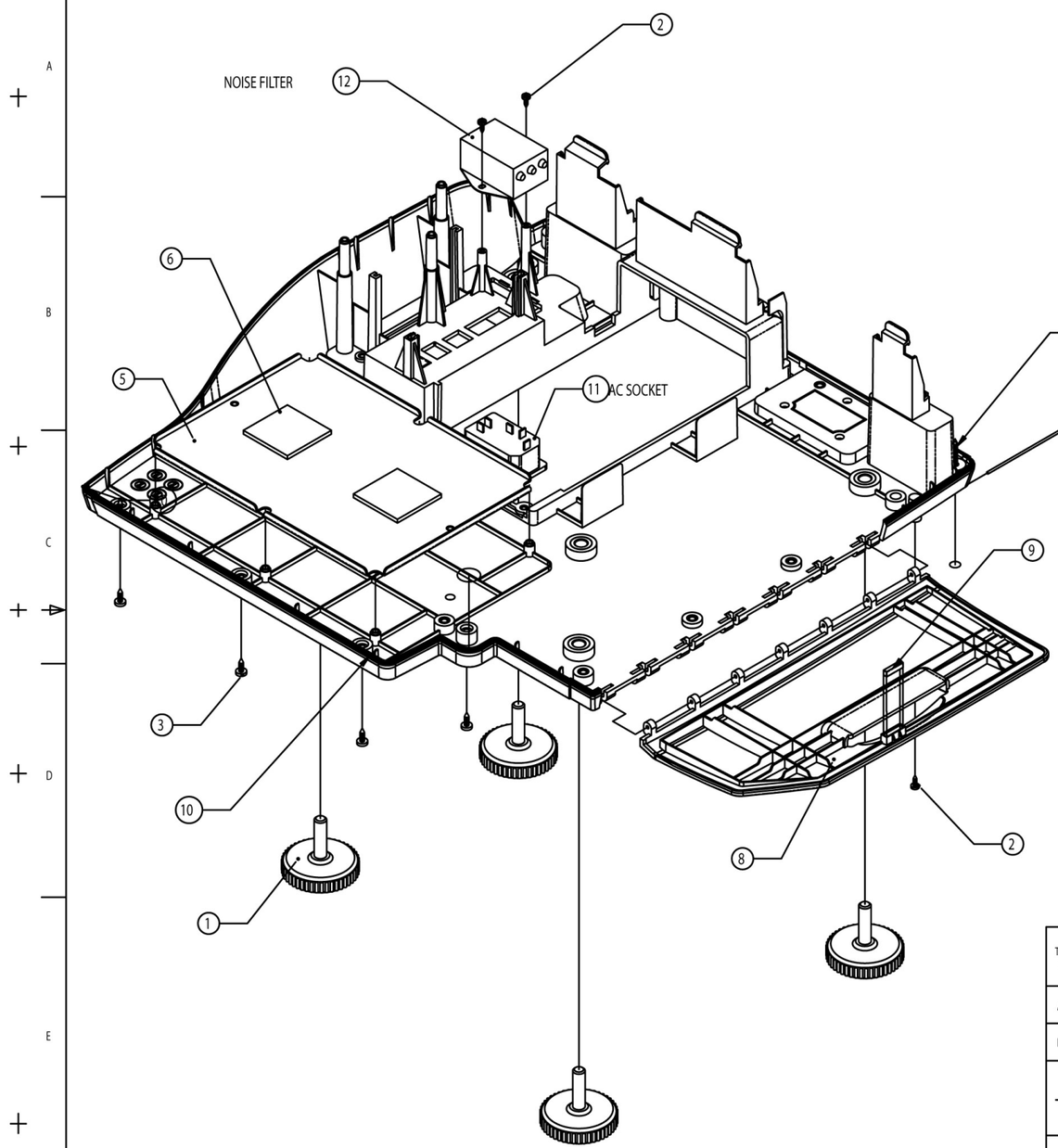

No.	Number	Description	Material	Spec	Q'ty
1	2610-A00-0009	FOOT	NBR	NBR M8*1.25*35(TP)	4
2	1510-A00-0308	TAPPING SCREW (PH)-1	SCM	M3*8	3
3	1510-A00-0410	TAPPING SCREW (PH)-1	SCM	M4*10	5
4	1210-A00-0093	DOOR SHAFT	SUS 303	CL5000 @1.5*296	1
5	1020-A00-0007	MAIN PCB COVER	EGI	CL5000 210*150*5.2	1
6	9300-SPL-0000	CUSHION-EVA	N/A	40*40*3t(nBODY-DP)	2
7	1510-A00-0430	TAPPING SCREW (PH)-1	SCM	M4*30	2
8	2004-A00-0089	DOOR PANEL	ABS	CL5000 260*120*27	1
9	1070-A00-0001	MAGNET	N/A	15*3*4(LP-I)(N30)NI	1
10	2004-A00-0088	BODY	ABS	CL5000 432*408*113	1

TOLERANCES :UNLESS OTHERWISE SPECIFIED	NAME OR TITLE: BODY ASS'Y	CAS CORPORATION #19 KANAP-RI KWANGJEOK-MYON YANGJU-KUN KYUNGKI-DO,KOREA	
ANGULAR :¾ ORD.			
DECIMAL :¾ ORD.	FIRST USED IN ASSEMBLY: SHOPPING SCALE	MATERIAL: ABS	
QTY/SET: 1	FIRST MADE FOR: CL5000	END FINISH: CORROSION	
	CONTRACT OR CUSTOMEDR NO.: WORLD WIDE	DO NOT SCALE DRAWING	DIMENSIONS ARE IN MM.INCH

DRAWN	CHECKED	APPROVED	SCALE	PART NO.	REV.
			1:3	PPP-CLP-MBOD	

CAS FORM A3 (297mmx420mm)

MODEL NO.	PART NO.	REVISIONS REV	SYM	CONTENTS	DRAWN	CHECKED	APPROVED

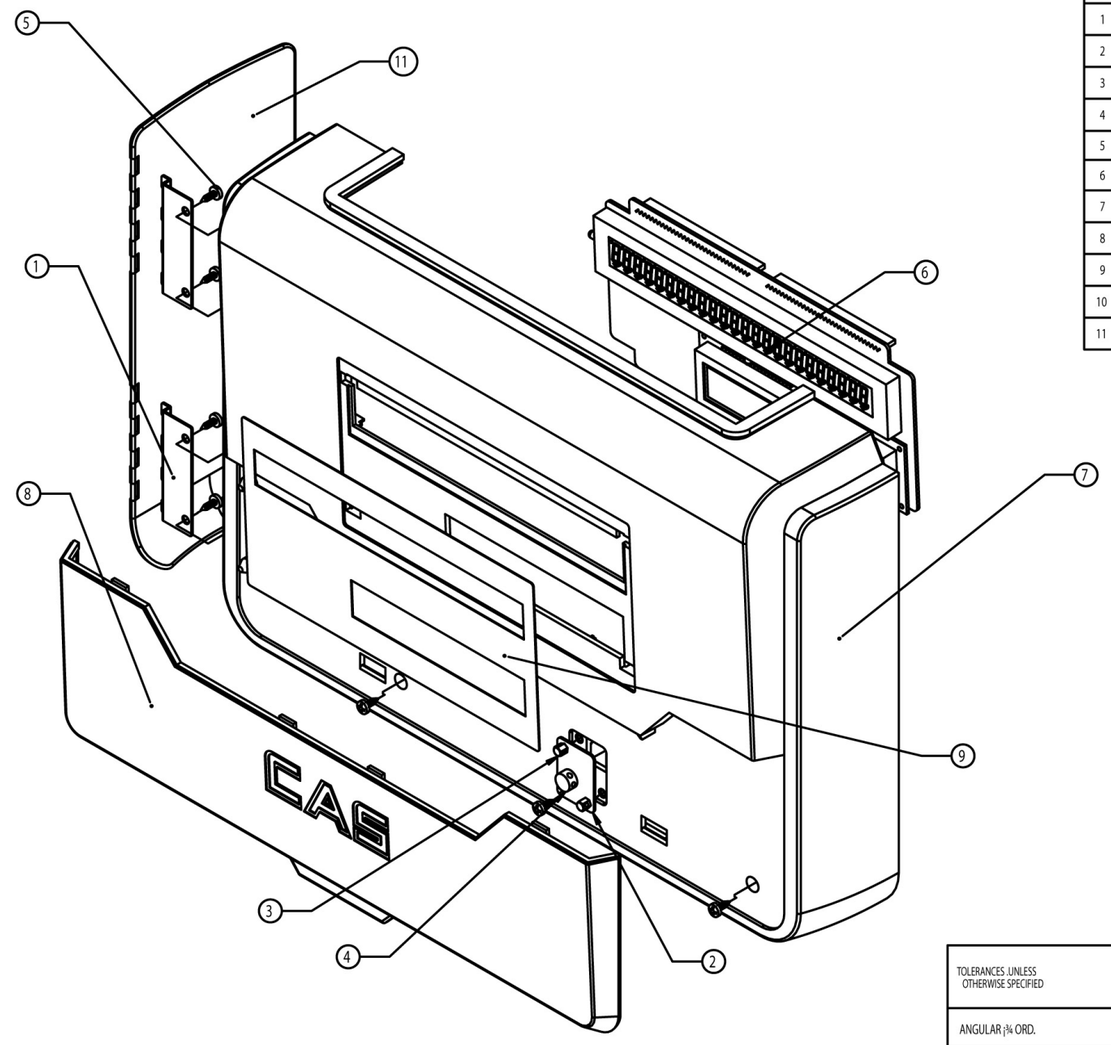

No.	Number	Description	Material	Spec	Q'ty
1	1005-A00-0114	DOOR PLATE	SUS 303	CL5000-H 67*26.3*5.1	2
2	1030-A00-0203	SEALING PLATE	SPC	35.2*26*1t	1
3	1265-A00-0001	SEALING BOLT	Ê²µ¿	M3*5 (Ê²µ¿) BI	2
4	9900-A00-0001	SEALING PB	PB	@10*5.6t	1
5	1510-A00-0410	TAPPING SCREW (PH)-1	SCM	M4*10	7
6	PPP-CLP-EFDP	DISPLAY PCB(F) POLE	N/A	220*160*29.2	1
7	2004-A00-0127	REAR COVER	ABS	CL5000-H 419*291.6*869	1
8	2004-A00-0129	CAL SWICH COVER	ABS	CL5000-H 389*122*13.8	1
9	2050-A00-0637	DISPLAY COVER(CL5000-H)	PC	CL5000-H 207.1*105.7*0.5t	1
10	1070-A00-0001	MAGNET	MAGHET	15*3*4(LP-I)(N30)NI	1
11	2004-A00-0130	DOOR COVER	ABS	CL5000-H 266*116*14.6	1

TOLERANCES .UNLESS OTHERWISE SPECIFIED	NAME OR TITLE: REAR COVER ASS'Y	CAS CORPORATION #19 KANAP-RI KWANGJEOK-MYON YANGJU-KUN KYUNGKI-DO,KOREA	
ANGULAR ¡¾ ORD.			
DECIMAL ¡¾ ORD.	FIRST USED IN ASSEMBLY: SHOPPING SCALE	MATERIAL: N/A	
Q'TY/SET: N/A / 1	FIRST MADE FOR: CL5000-H	END FINISH: N/A	
	CONTRACT OR CUSTOMEDR NO.: WORLD WIDE	DO NOT SCALE DRAWING	DIMENSIONS ARE IN MM.IN.H

DRAWN	CHECKED	APPROVED	SCALE	PART NO.	REV.
			1:1	PPP-CLH-MREC	N/A

2005³à 11¿ù 15ÀÏ Ê¿àÀÍ ¿ÀÊÄ 4:34:28

CAS FORM A3 (297mmx420mm)

10.3 Platform

MODEL NO.	PART NO.	REVISIONS REV	SYM	CONTENTS	DRAWN	CHECKED	APPROVED

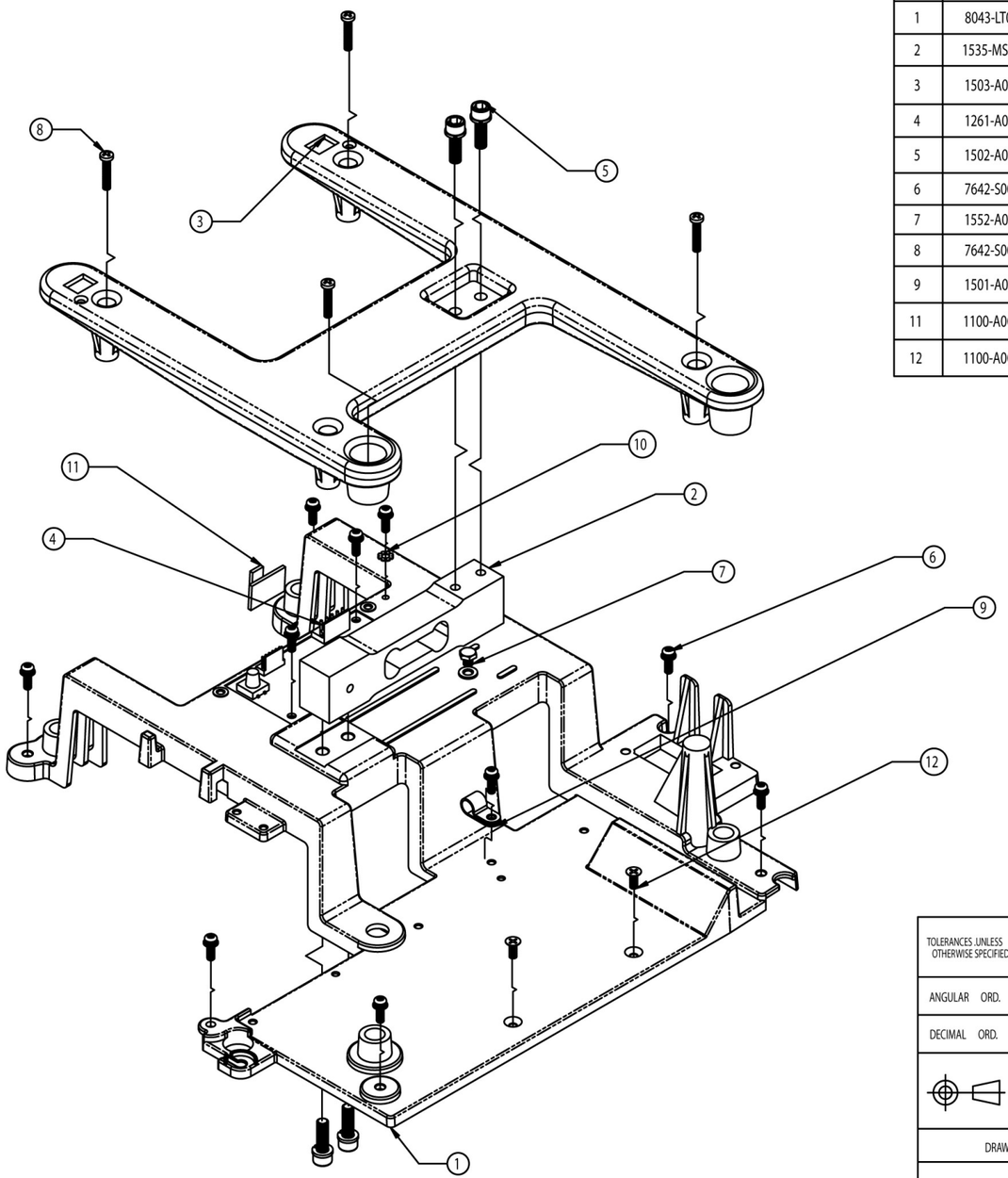

No.	Number	Description	Material	Spec	Q'ty
1	8043-LT0-006L	LOADCELL	AL2024T4	TP-TYPE	1
2	1535-MSU-0620	WRENCH BOLT	SUS	M6*20	4
3	1503-A00-0412	MACHINE SCREW (WPH)	SCM	WPH M4*12	10
4	1261-A00-0008	LIMIT BOLT	SCM	M5*8.5(ZnÈ²»ö,15Kg)	1
5	1502-A00-0420	MACHINE SCREW (PH)	SCM	M-S PH M4X20	4
6	7642-S00-0005	CABLE CLAMP	ABS	DA-4N	1
7	1552-A00-0400	WASHER (OTO)	SCM	¥ö4	1
8	7642-S00-0060	METAL CLAMP	N/A	6N	1
9	1501-A00-0408	MACHINE SCREW (FH)	SCM	M4*8	2
11	1100-A00-0068	PLATFORM LOWER	AL DIE CASTING	CL5000 378*349*75	1
12	1100-A00-0067	PLATFORM UPPER	AL DIE CASTING	CL5000 345*215*36	1

TOLERANCES .UNLESS OTHERWISE SPECIFIED	NAME OR TITLE: PLATFORM ASS'Y		CAS CORPORATION #19 KANAP-RI KWANGJEOK-MYON YANGJU-KUN KYUNGKI-DO,KOREA		
ANGULAR ORD.					
DECIMAL ORD.	FIRST USED IN ASSEMBLY: SHOPPING SCALE		MATERIAL: AL DIE CASTING		
Q'TY/SET: 1	FIRST MADE FOR: CL5000		END FINISH		
	CONTRACT OR CUSTOMEDR NO.: WORLD WIDE		DO NOT SCALE DRAWING	DIMENSIONS ARE IN MM.IN(H)	
DRAWN	CHECKED	APPROVED	SCALE	PART NO.	REV.
			1:2	PPP-CLP-MPLA	0

CAS FORM A3 (297mmx420mm)

10.3 Main Frame (H-type)

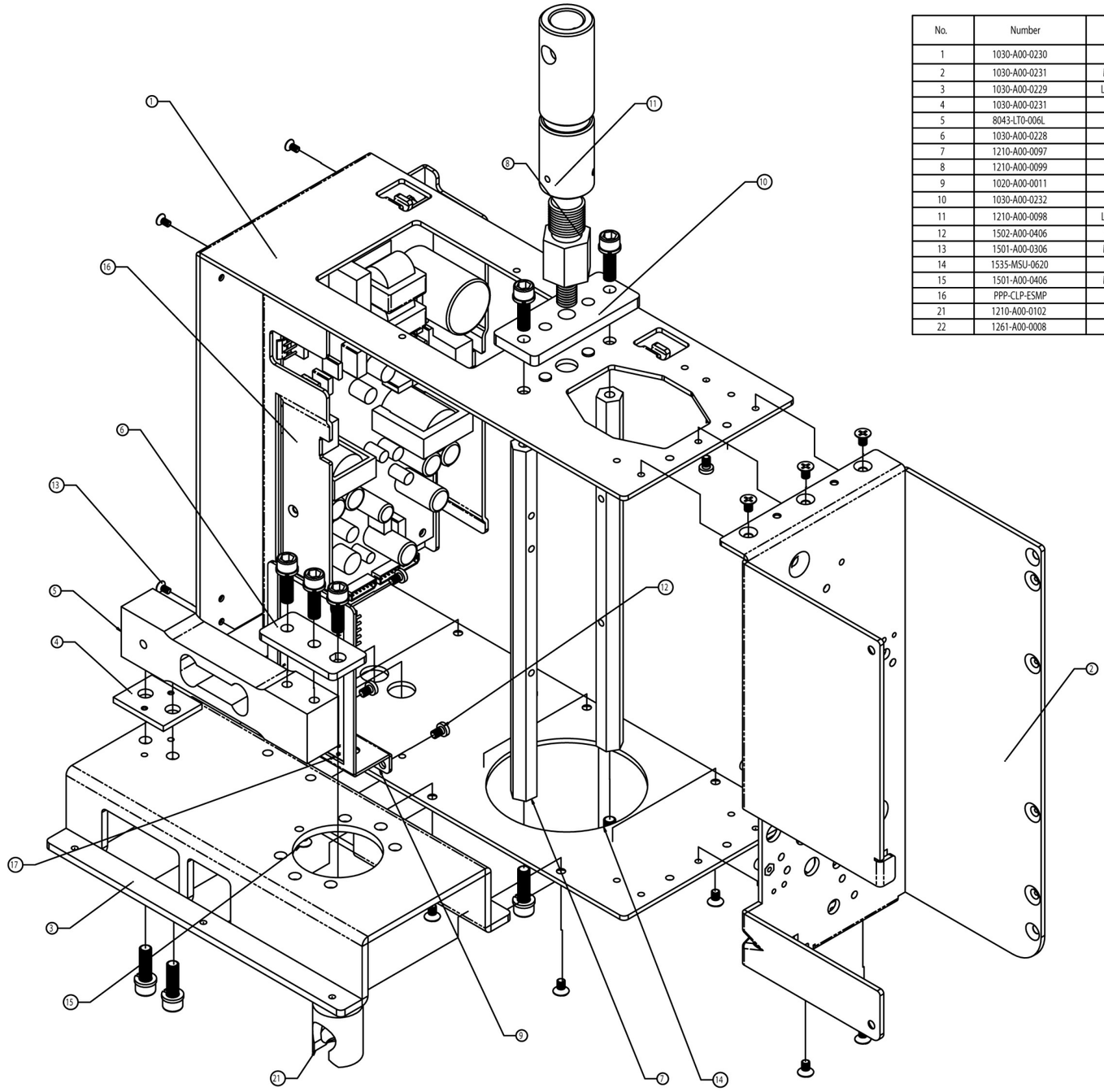

No.	Number	Description	Material	Spec	Q'ty
1	1030-A00-0230	MAIN FRAME	PO	CL5000-H 296.4*251.2*2.6t	1
2	1030-A00-0231	MECHANISM BRACKET	PO	CL5000-H 261.6*95*92.4*2.6t	1
3	1030-A00-0229	LOADCELL BASE PLATE	PO	CL5000-H 207*120*36*4t	1
4	1030-A00-0231	LC PLATE	SPC	35*27*3.2t	1
5	8043-LT0-006L	LOADCELL	AL2024T4	TP-TYPE	1
6	1030-A00-0228	LOAD PLATE	PO	CL5000-H 53*25*4t	1
7	1210-A00-0097	LOAD SHAFT	S20C	CL5000-H 12*211.2	2
8	1210-A00-0099	UPPER LOAD SHAFT	S20C	CL5000-H @22*61.5	1
9	1020-A00-0011	AD PCB BRACKET	EGI	CL5000-H 60*16.2*100*1.2t	1
10	1030-A00-0232	UPPER LOAD PLATE	PO	CL5000-H 75*30*6t	1
11	1210-A00-0098	LOAD SHAFT HOUSING	20A(SCH160)	CL5000-H @27.2*100*5.5t	1
12	1502-A00-0406	SCREW MACHINE(PH)	SCM	M4*6	5
13	1501-A00-0306	MACHINE SCREW (FH)	SCM	M3 * 6	4
14	1535-MSU-0620	BOLT WRENCH	SUS	M6*20	9
15	1501-A00-0406	MACHINE SCREW (FH)	SCM	M3 * 6	11
16	PPP-CLP-ESMP	SMPS	N/A	CLP 230*110*30	1
21	1210-A00-0102	LOADCELL SHAFT	SUS 303	CL5000-H @15*82	1
22	1261-A00-0008	LIMIT BOLT	SCM	M5*8.5(ZnÊ²»ö,15Kg)	1

TOLERANCES UNLESS OTHERWISE SPECIFIED	NAME OR TITLE: MAIN FRAME ASS'Y	CAS CORPORATION #79 KANAP-RI KWANGJI-OK-MYON YANGJU-KUN KYUNGKI-DO,KOREA
ANGULAR ± ½ ORD.		
DECIMAL ± ½ ORD.	FIRST USED IN ASSEMBLY: SHOPPING SCALE	MATERIAL
Q'TY/SET: 1	FIRST MADE FOR: CL5000-H	END FINISH
	CONTRACT OR CUSTOMER NO.: WORLD WIDE	DO NOT SCALE DRAWING / DIMENSIONS ARE IN MM
DRAWN	CHECKED / APPROVED	SCALE: 1:1 / PART NO.: PPP-CLH-MMFR / REV.

CAS FORM A1 (594mmx841mm)

10.3 I.O cover

MODEL NO.	PART NO.	REVISIONS REV	SYM	CONTENTS	DRAWN	CHECKED	APPROVED

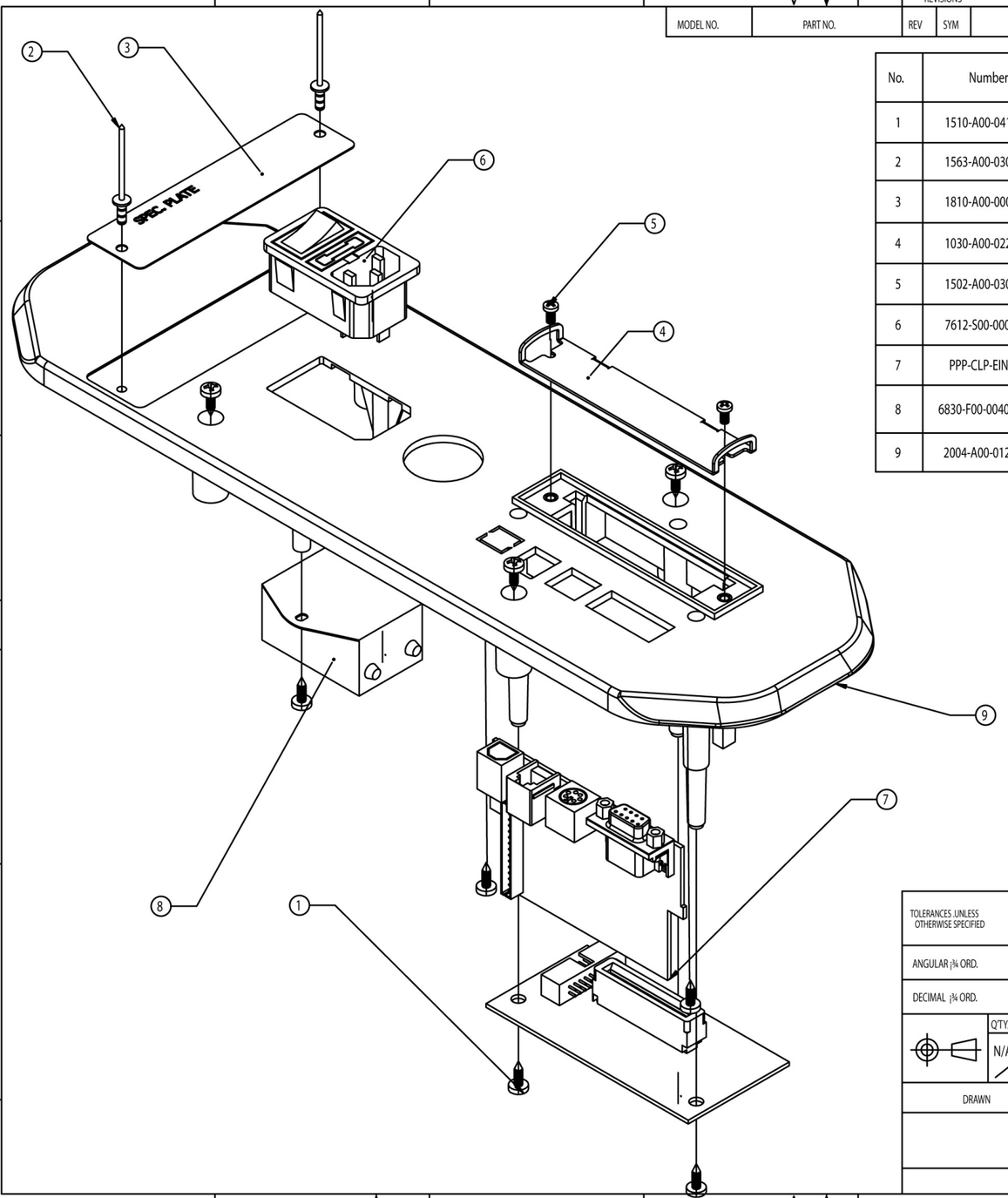

No.	Number	Description	Material	Spec	Q'ty
1	1510-A00-0410	TAPPING SCREW (PH)-1	SCM	M4*10	11
2	1563-A00-0308	RIVET	AL	¥ö3.2*8	2
3	1810-A00-0005	SPEC PLATE	AL 0.5t	107.6*27.6*0.5t(DB-II)	1
4	1030-A00-0225	SLOT COVER PLATE	SPC	CL5000 96.6*20.6*26.2	1
5	1502-A00-0306	MACHINE SCREW (PH)	SCM	M3*6	2
6	7612-S00-0004	AC SOCKET CONNECTOR	ABS	JR-101(PDII,S/W Æ÷ÇÒ)SKT	1
7	PPP-CLP-EINP	IO PCB	N/A	CLP 93*60*1.6	1
8	6830-F00-0040-0	NOISE FILTER	N/A	CLP 48*31.2*23.4	1
9	2004-A00-0128	IO COVER	ABS	CL5000-H 370*116*89.5	1

TOLERANCES .UNLESS OTHERWISE SPECIFIED	NAME OR TITLE	IO COVER ASS'Y	CAS CORPORATION #19,KANAP-RI KWANGJEOK-MYON YANGJU-KUN KYUNGKI-DO,KOREA		
ANGULAR ¡¾ ORD.					
DECIMAL ¡¾ ORD.	FIRST USED IN ASSEMBLY	SHOPPING SCALE	MATERIAL	N/A	
Q'TY/SET N/A / 1	FIRST MADE FOR	CL5000-H	END FINISH	N/A	
	CONTRACT OR CUSTOMEDR NO.	WORLD WIDE	DO NOT SCALE DRAWING	DIMENSIONS ARE IN MM,INCH	

DRAWN	CHECKED	APPROVED	SCALE	PART NO.	REV.
			1:1	PPP-CLH-MIOC	N/A

CAS FORM A3 (297mmx420mm)

10.4 Upper Case

MODEL NO.	PART NO.	REVISIONS REV	SYM	CONTENTS	DRAWN	CHECKED	APPROVED

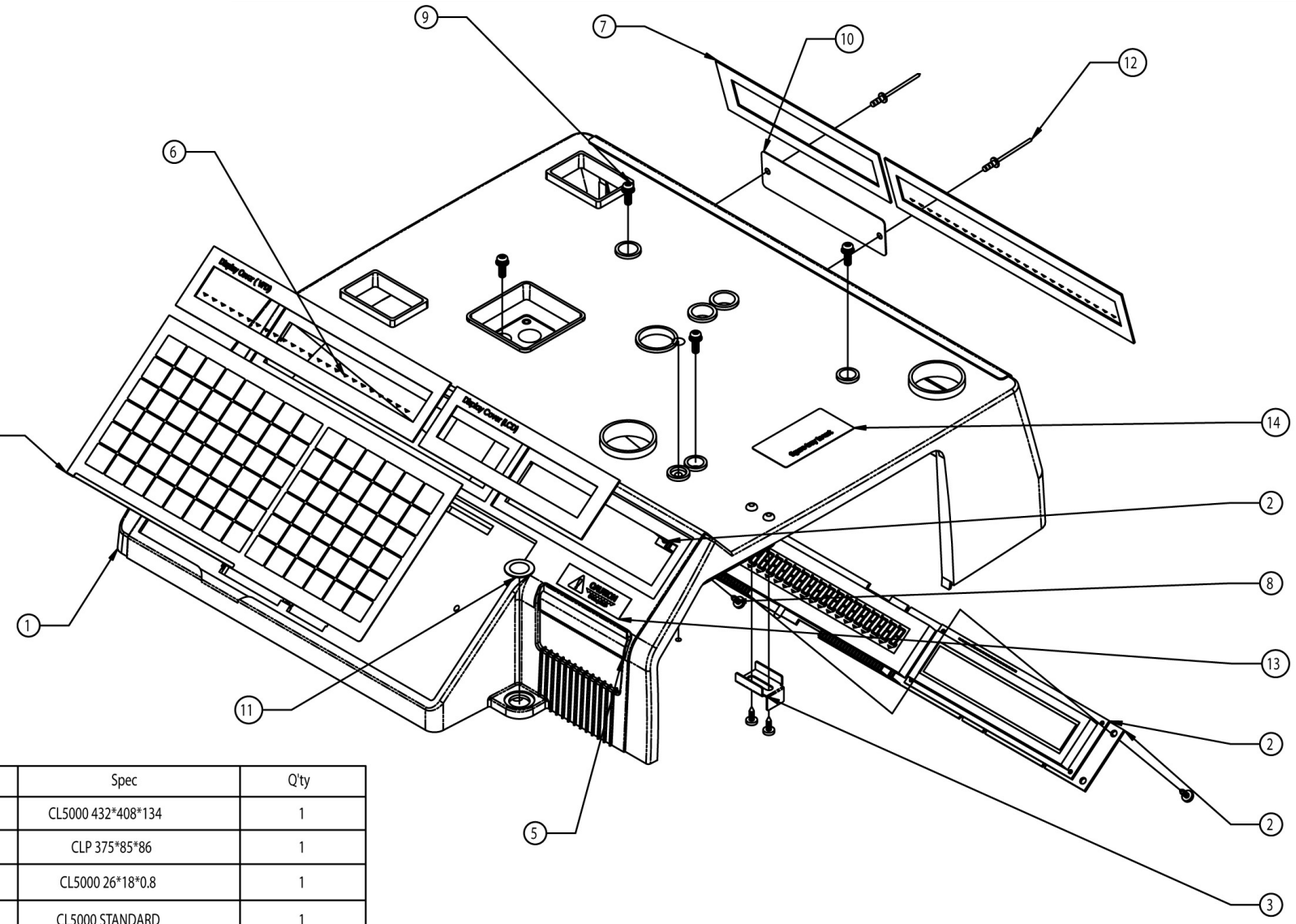

No.	Number	Description	Material	Spec	Q'ty
1	2004-A00-0094	UPPER CASE	ABS	CL5000 432*408*134	1
2	PPP-CLP-EDIP	Display PCB		CLP 375*85*86	1
3	1030-A00-0226	DOOR PLATE	SPC	CL5000 26*18*0.8	1
4	2100-A00-0233	MEMBRANE S/W		CL5000 STANDARD	1
5	1000-A00-0219	PAPER CUTTER	SUS	CL5000 77.5*15.3	1
6	2050-A00-0631	DISPLAY COVER	MITSUBISHI_522F	CL5000 206.5*43.2*1t	2
7	2050-A00-0632	DISPLAY COVER	Transparency PC	CL5000 141.5*43.2*1t	2
8	1510-A00-0410	TAPPING SCREW (PH)-1	SCM	M4*10	5
9	1503-A00-0412	MACHINE SCREW (WPH)	SCM	WPH M4*12	4
10	1810-A00-0005	SPEC PLATE	AL 0.5t	107.6*27.6*0.5t(DB-II)	1
11	2010-A00-0026	W/L GAGE COVER	LEXAN 0.5t	©ª18.5*0.5t	1
12	1563-A00-0308	RIVET	AL	¥ö3.2*8	2
13	9020-CL2-0000	PAPER CUT STICKER			1
14	9020-CL0-0005	TRAY STICKER			1

TOLERANCES :UNLESS OTHERWISE SPECIFIED	NAME OR TITLE: Upper Case Ass'y	CAS CORPORATION #19 KANAP-RI KWANGJEOK-MYON YANGJU-KUN KYUNGKI-DO,KOREA	
ANGULAR :¡¾ ORD.			
DECIMAL :¡¾ ORD.	FIRST USED IN ASSEMBLY: SHOPPING SCALE	MATERIAL	
QTY/SET: 1	FIRST MADE FOR: CL5000	END FINISH	
	CONTRACT OR CUSTOMEDR NO.: WORLD WIDE	DO NOT SCALE DRAWING	DIMENSIONS ARE IN MM.INCH

DRAWN	CHECKED	APPROVED	SCALE	PART NO.	REV.
			1:3	PPP-CLP-MUPP	

CAS FORM A3 (297mmx420mm)

10.4 Pole display P-type

MODEL NO.	PART NO.	REVISIONS REV	SYM	CONTENTS	DRAWN	CHECKED	APPROVED

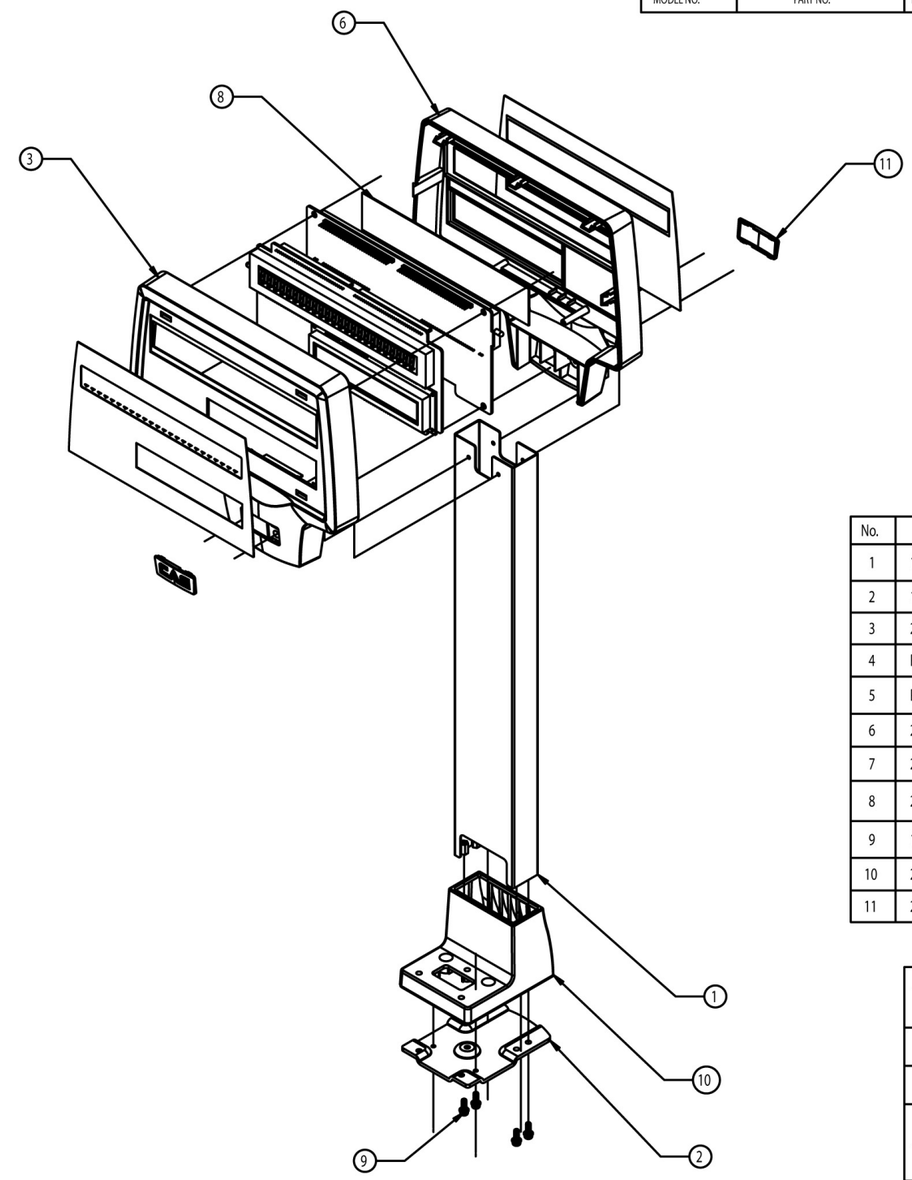

No.	NUMBER	Description	Material	Spec	Q'ty
1	1000-A00-0220	POST PIPE	SUS 304	CL5000 30*70*430*1t	1
2	1030-A00-0221	SUPPORT	SPC 1.5t	CL5000 84.2*68.9*1.5t	1
3	2004-A00-0079	DISPLAY CASE	ABS	CL5000 (R TYPE FRONT)	1
4	PPP-CLP-EFDP	DISPLAY PCB(F) POLE	N/A	220*160*29.2	1
5	PPP-CLP-ERDP	DISPLAY PCB(R) POLE	N/A	CLP 220*160*29.2	1
6	2004-A00-0080	DISPLAY CASE	ABS	CL5000 (R TYPE REAR)	1
7	2050-A00-6330	DISPLAY COVER	PC	CL5000 (R TYPE)	2
8	2010-A00-0029	DISPLAY FILTER	PC 522F	CL5000 196.7*37.6*1t R TYPE	1
9	1503-A00-0412	MACHINE SCREW (WPH)	SCM	WPH M4*12	4
10	2007-A00-0002	DISPLAY BRACKET	PC(glass 25%)	CL5000 110*71*82.4	1
11	2004-A00-0099	NAME PLATE COVER	ABS	CL5000	2

TOLERANCES ,UNLESS OTHERWISE SPECIFIED

ANGULAR ¡¾ ORD.

DECIMAL ¡¾ ORD.

Q'TY/SET N/A / 1

NAME OR TITLE: DISPLAY CASE R TYPE

FIRST USED IN ASSEMBLY: SHOPPING SCALE

FIRST MADE FOR: CL5000

CONTRACT OR CUSTOMEDR NO.: WORLD WIDE

CAS CORPORATION
#19 KANAP-RI KWANGJEOK-MYON
YANGJU-KUN KYUNGKI-DO,KOREA

MATERIAL: N/A

END FINISH: N/A

DO NOT SCALE DRAWING

DIMENSIONS ARE IN MM,INCH

DRAWN	CHECKED	APPROVED	SCALE	PART NO.	REV.
			1:1	PPP-CLP-PDIS	N/A

FOLD FOLD

CAS FORM A3 (297mmx420mm)

MODEL NO.	PART NO.	REVISIONS REV	SYM	CONTENTS	DRAWN	CHECKED	APPROVED

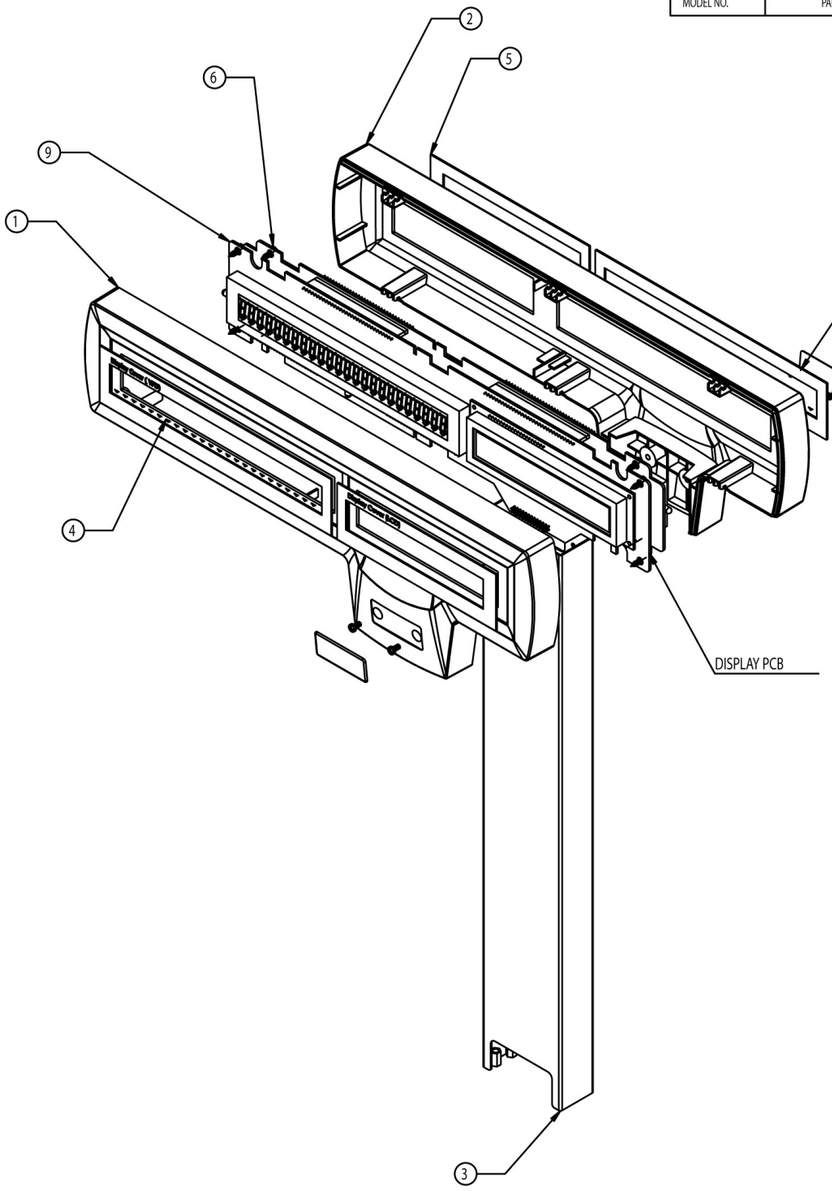

No.	Number	Description	Material	Spec	Q'ty
1	2004-A00-0097	DISPLAY CASE	ABS	CL5000 (P TYPE FRONT)	1
2	2004-A00-0098	DISPLAY CASE	ABS	CL5000 (P TYPE REAR)	1
3	1000-A00-0220	POST PIPE	SUS 304	CL5000 30*70*430*1t	1
4	2050-A00-0631	DISPLAY COVER	N/A	CLP TOOL(VFD)	2
5	2050-A00-0632	DISPLAY COVER	N/A	CLP TOOL(LCD)	2
6	1510-A00-0410	TAPPING SCREW (PH)-1	SCM	M4*10	8
7	1502-A00-0306	MACHINE SCREW (PH)	SCM	M3*6	4
8	1800-SPL-0033	NAME PLATE	EPOXY	SP-BL	2

TOLERANCES .UNLESS OTHERWISE SPECIFIED	NAME OR TITLE: DISPLAY CASE P TYPE	CAS CORPORATION #19 KANAP-RI KWANGJEOK-MYON YANGJU-KUN KYUNGKI-DO,KOREA	
ANGULAR ¡¾ ORD.			
DECIMAL ¡¾ ORD.	FIRST USED IN ASSEMBLY: SHOPPING SCALE	MATERIAL: N/A	
Q'TY/SET: N/A / 1	FIRST MADE FOR: CL5000	END FINISH: N/A	
	CONTRACT OR CUSTOMEDR NO.: WORLD WIDE	DO NOT SCALE DRAWING	DIMENSIONS ARE IN MM.INCH

DRAWN	CHECKED	APPROVED	SCALE	PART NO.	REV.
			1:1	PPP-CLP-MDIS-1	N/A

2005¹à 11¿ù 15ÀÏ È¿àÀÏ ¿ÀÀù 9:47:46

CAS FORM A3 (297mmx420mm)

FOLD FOLD

10.5 Printer Assembly

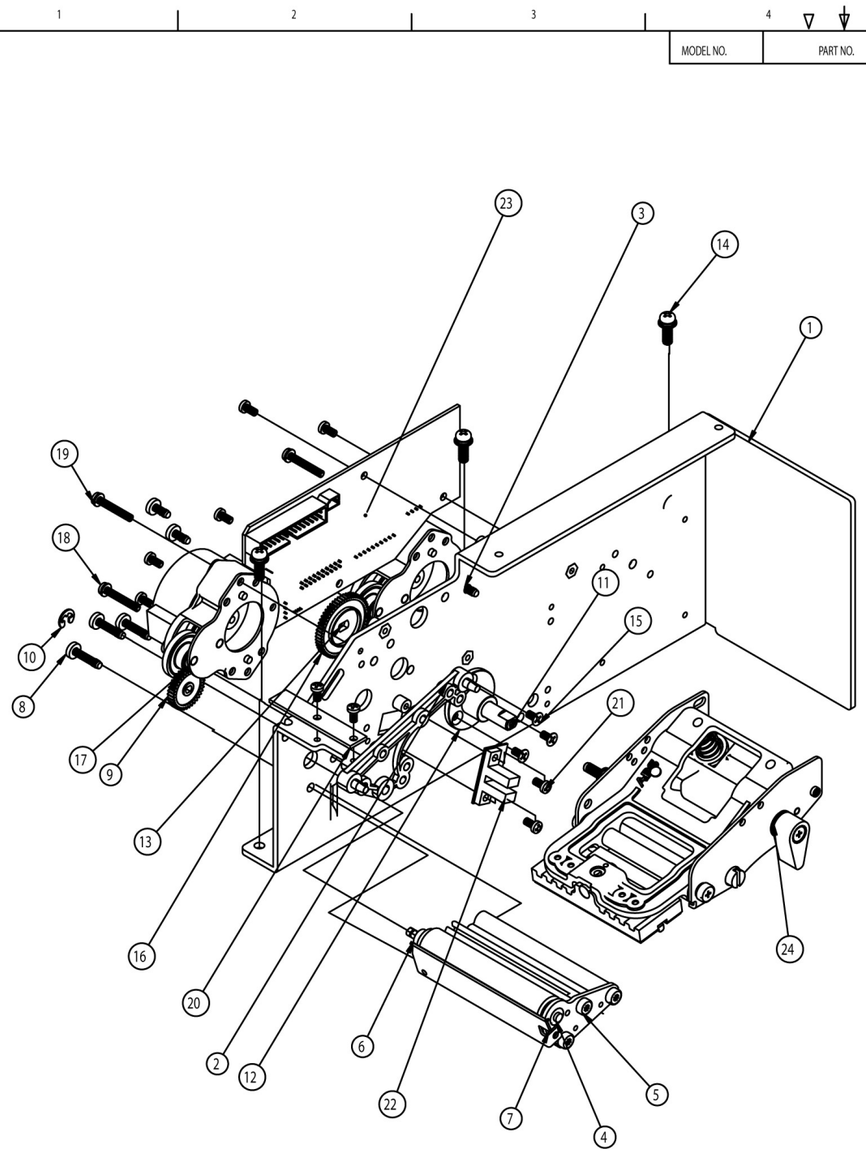

No.	Number	Description	Material	Spec	Q'ty
1	1030-A00-0220	MECHANISM BRACKET	PO	CL5000 261*111*112.6	1
2	1100-A00-0069	PRINTER SPACER	AL_DIECASTING		1
3	1537-A00-0408	TAPTITE SCREW		M4x8	3
4	2620-A00-0030	SHAFT SILICON RUBBER	N/A		1
5	1150-A00-0010	LOWER FRAME ASS'Y	AL		1
6	1210-A00-0095	SHAFT BUSHING	BSSM-2		1
8	1537-A00-0415	TAPTITE SCREW		M4 x 15	3
9	2011-A00-0014	SPUR GEAR	ACETAL	OD_9.5 M_0.5	1
10	1561-MSU-0300	E-Ring	SUS	©ª3*©ª7*0.6	1
11	1210-A00-0094	SHAFT BEARING	SUS 304	CL5000 @7*37	1
12	2011-A00-0013	BUSHING BEARING	ACETAL	CL5000 @28*15.5	1
13	1561-MSU-0400	E-Ring	SUS	©ª4*©ª9*0.6-SUS	2
14	1503-A00-0412	MACHINE SCREW (WPH)	SCM	WPH M4*12	4
15	1501-A00-0306	MACHINE SCREW (FH)	SCM	M3 * 6	3
16	2011-A00-0015	SPUR GEAR	ACETAL	OD_29.4 M_0.5	1
17	6450-TMT-0001	NMB MOTOR ASS'Y		PM42M-048-XXXX	2
18	1502-A00-0320-0	SCREW-MACHINE(PH)		M3*20	4
19	1551-A00-0300	WASHER(SPR)		@3	4
20	PPP-CLP-EPSP	Peeloff Sensor PCB Ass'y		49*10*1.5	1
21	1502-A00-0306	MACHINE SCREW (PH)	SCM	M3*6	10
22	2010-A00-0001-0]	GAP SENSOR ASS'Y			1
23	PPP-CLP-ECTP	PRINTER PCB ASS'Y		130*60*1.6	1
24	6410-TPN-0002	APS PRINTER MACHANISM			1

REVISIONS: REV | SYM | CONTENTS | DRAWN | CHECKED | APPROVED

TOLERANCES ,UNLESS OTHERWISE SPECIFIED
ANGULAR ¡¾ ORD.
DECIMAL ¡¾ ORD.
Q'TY/SET N/A / 1

NAME OR TITLE: BASE BRACKET ASS'Y
FIRST USED IN ASSEMBLY: SHOPPING SCALE
FIRST MADE FOR: CL5000
CONTRACT OR CUSTOMEDR NO.: WORLD WIDE

CAS CORPORATION
#19 KANAP-RI KWANGJEOK-MYON
YANGJU-KUN KYUNGKI-DO,KOREA

MATERIAL
END FINISH
DO NOT SCALE DRAWING
DIMENSIONS ARE IN MM,INCH

DRAWN	CHECKED	APPROVED	SCALE	PART NO.	REV.
			1:1.5	PPP-CLP-MBAS	

FOLD FOLD
CAS FORM A3 (297mmx420mm)

10.6 Printer Header Assemble

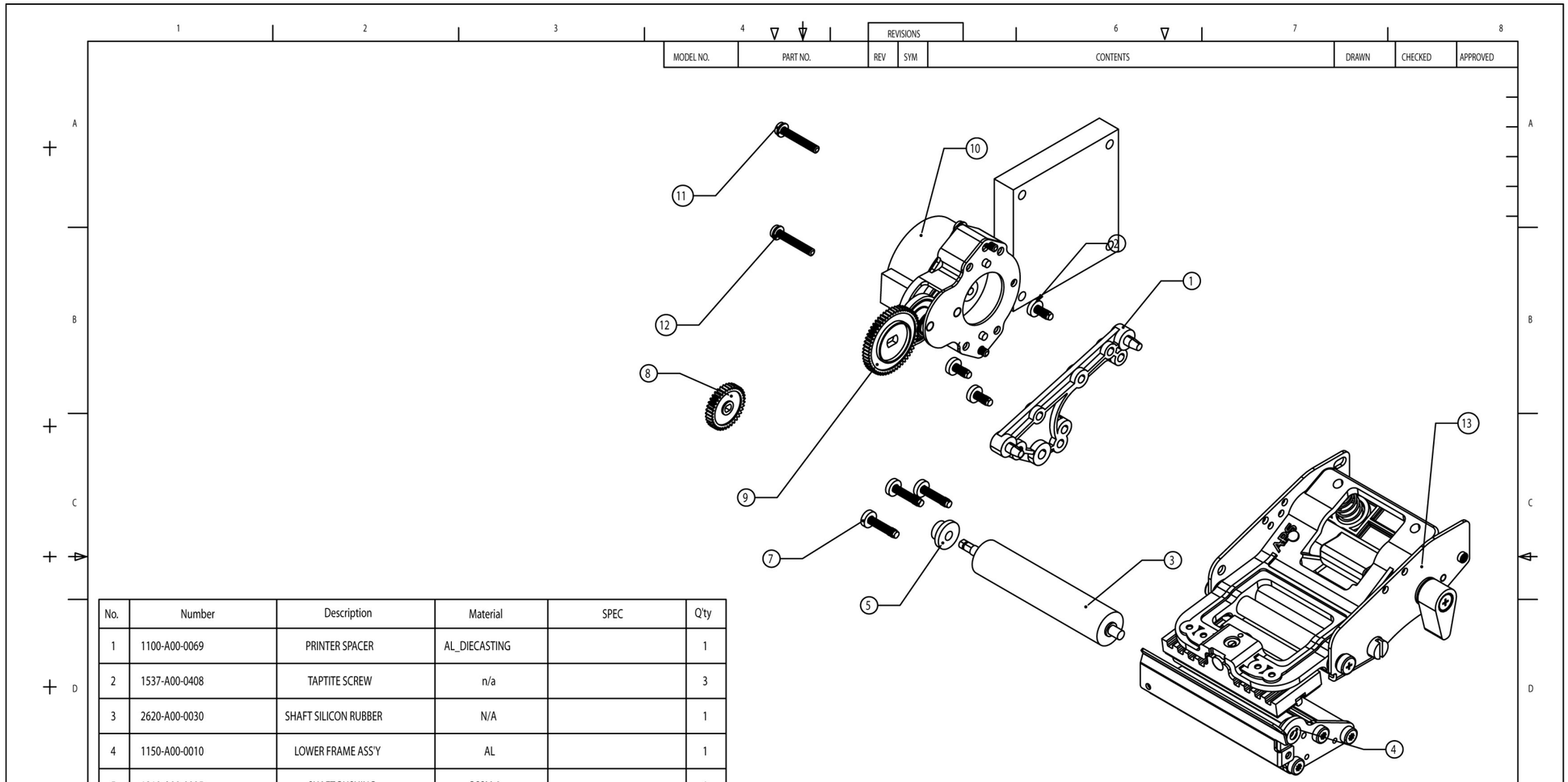

No.	Number	Description	Material	SPEC	Q'ty
1	1100-A00-0069	PRINTER SPACER	AL_DIECASTING		1
2	1537-A00-0408	TAPTITE SCREW	n/a		3
3	2620-A00-0030	SHAFT SILICON RUBBER	N/A		1
4	1150-A00-0010	LOWER FRAME ASS'Y	AL		1
5	1210-A00-0095	SHAFT BUSHING	BSSM-2		1
7	1537-A00-0415	TAPTITE SCREW	n/a		3
8	2011-A00-0014	SPUR GEAR	ACETAL		1
9	2011-A00-0015	SPUR GEAR	ACETAL		1
10	6450-TMT-0001	NMB MOTOR ASS'Y	n/a		1
11	1502-A00-0320-0	SCREW-MACHINE(PH)	n/a	M3*20	4
12	1551-A00-0300	WASHER(SPR)	n/a	@3	4
13	6410-TPN-0002	APS PRINTER MACHANISM	n/a		1

TOLERANCES UNLESS OTHERWISE SPECIFIED	NAME OR TITLE: PRINTER HEAD ASS'Y	CAS CORPORATION #19 KANAP-RI KWANGJEOK-MYON YANGJU-KUN KYUNGKI-DO,KOREA	
ANGULAR ¡¾ ORD.			
DECIMAL ¡¾ ORD.	FIRST USED IN ASSEMBLY: SHOPPING SCALE	MATERIAL	
Q'TY/SET N/A / 1	FIRST MADE FOR: CL5000	END FINISH	
	CONTRACT OR CUSTOMEDR NO.: WORLD WIDE	DO NOT SCALE DRAWING	DIMENSIONS ARE IN MM,IN

DRAWN	CHECKED	APPROVED	SCALE	PART NO.	REV.
			1:1.5	PPP-CLP-MASP	

CAS FORM A3 (297mmx420mm)

10.7. Cartridge

MODEL NO.	PART NO.	REVISIONS REV	SYM	CONTENTS	DRAWN	CHECKED	APPROVED

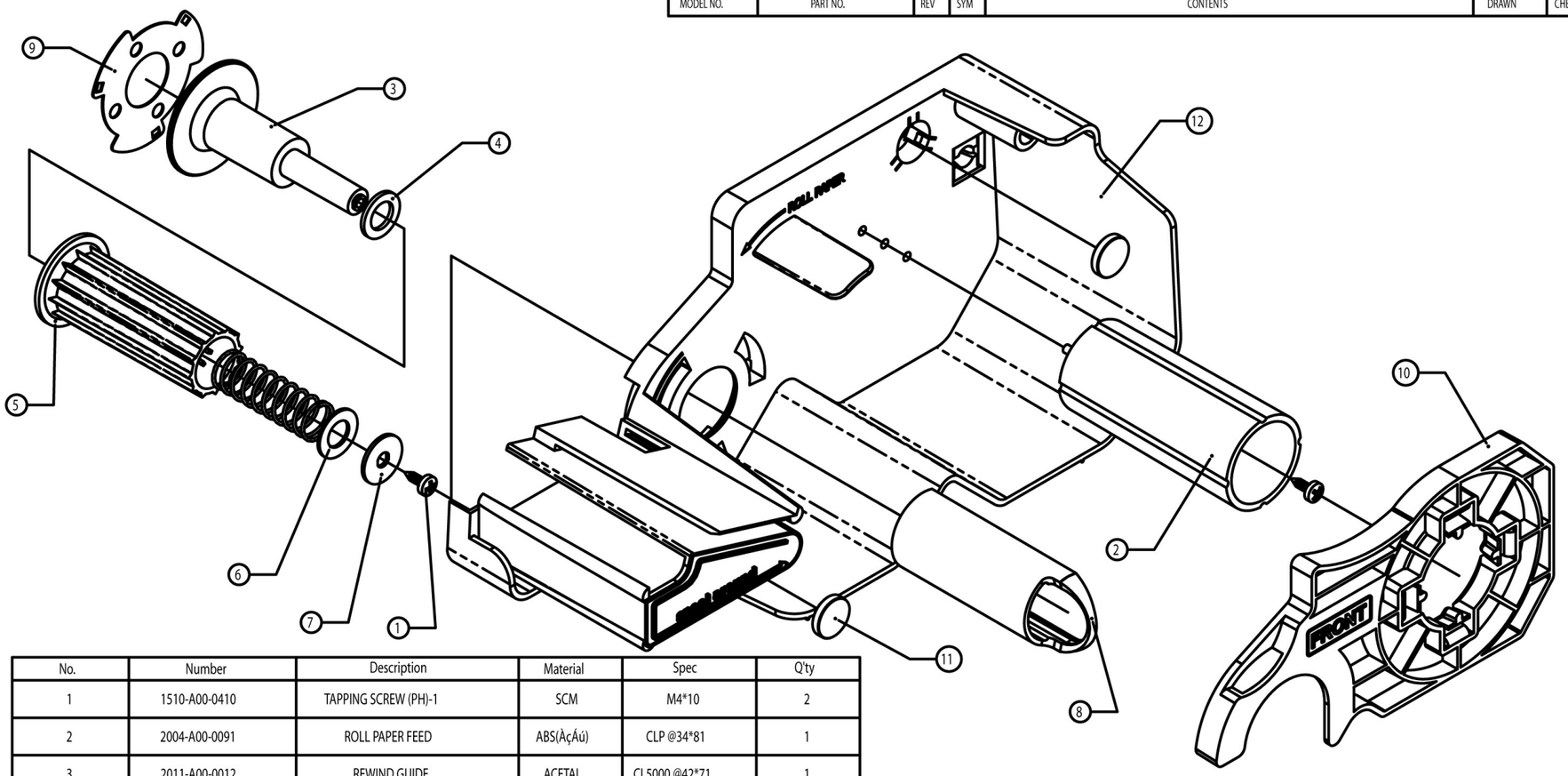

No.	Number	Description	Material	Spec	Q'ty
1	1510-A00-0410	TAPPING SCREW (PH)-1	SCM	M4*10	2
2	2004-A00-0091	ROLL PAPER FEED	ABS(ÀçÁú)	CLP @34*81	1
3	2011-A00-0012	REWIND GUIDE	ACETAL	CL5000 @42*71	1
4	2620-A00-0029	SILICONE WASHER	SILICONE RUBBER	CL5000 @17*1.5	1
5	2004-A00-0092	REWIND PAPER	ABS(³¿¬)	CLP @33.5*69	1
6	2021-A00-0010	REWIND WASHER	PET	CL5000 @18*0.5t	1
7	1000-A00-0218	STOPPER WASHER	SUS	CL5000 @18*1.2t	1
8	2010-A00-0028	REWIND PAPER LOCKER	PC	CL5000 @29*82	1
9	1000-A00-0217	REWIND STOPPER PLATE	SUS	CL5000 @53*0.5t	1
10	2004-A00-0093	ROLL COVER	ABS(³¿¬)	CL5000 160*80*10	1
11	1070-A00-0003	MAGNET	N/A	CLP @15 x 3	2
12	2004-A00-0090	CARTRIDGE	ABS(³¿¬)	CL5000 254*107*94	1
13	1590-A00-0390	SPRING	SUS304	CL5000 13.5 * 1.0 * 45	1
14	9020-CL0-0003	SPOOL STICKER	N/A	N/A	1

TOLERANCES .UNLESS OTHERWISE SPECIFIED	NAME OR TITLE: CARTRIDGE	CAS CORPORATION #19 KANAP-RI KWANGJEOK-MYON YANGJU-KUN KYUNGKI-DO,KOREA
ANGULAR ¡¾ ORD.		
DECIMAL ¡¾ ORD.	FIRST USED IN ASSEMBLY: SHOPPING SCALE	MATERIAL: ABS
Q'TY/SET: 1	FIRST MADE FOR: CL5000	END FINISH
	CONTRACT OR CUSTOMEDR NO.: WORLD WIDE	DO NOT SCALE DRAWING / DIMENSIONS ARE IN MM.IN (H)

DRAWN	CHECKED	APPROVED	SCALE	PART NO.	REV.
			1:1.5	PPP-CLP-MCAR	

CAS FORM A3 (297mmx420mm)

10.8 Tray assembly (B,P,R-type)

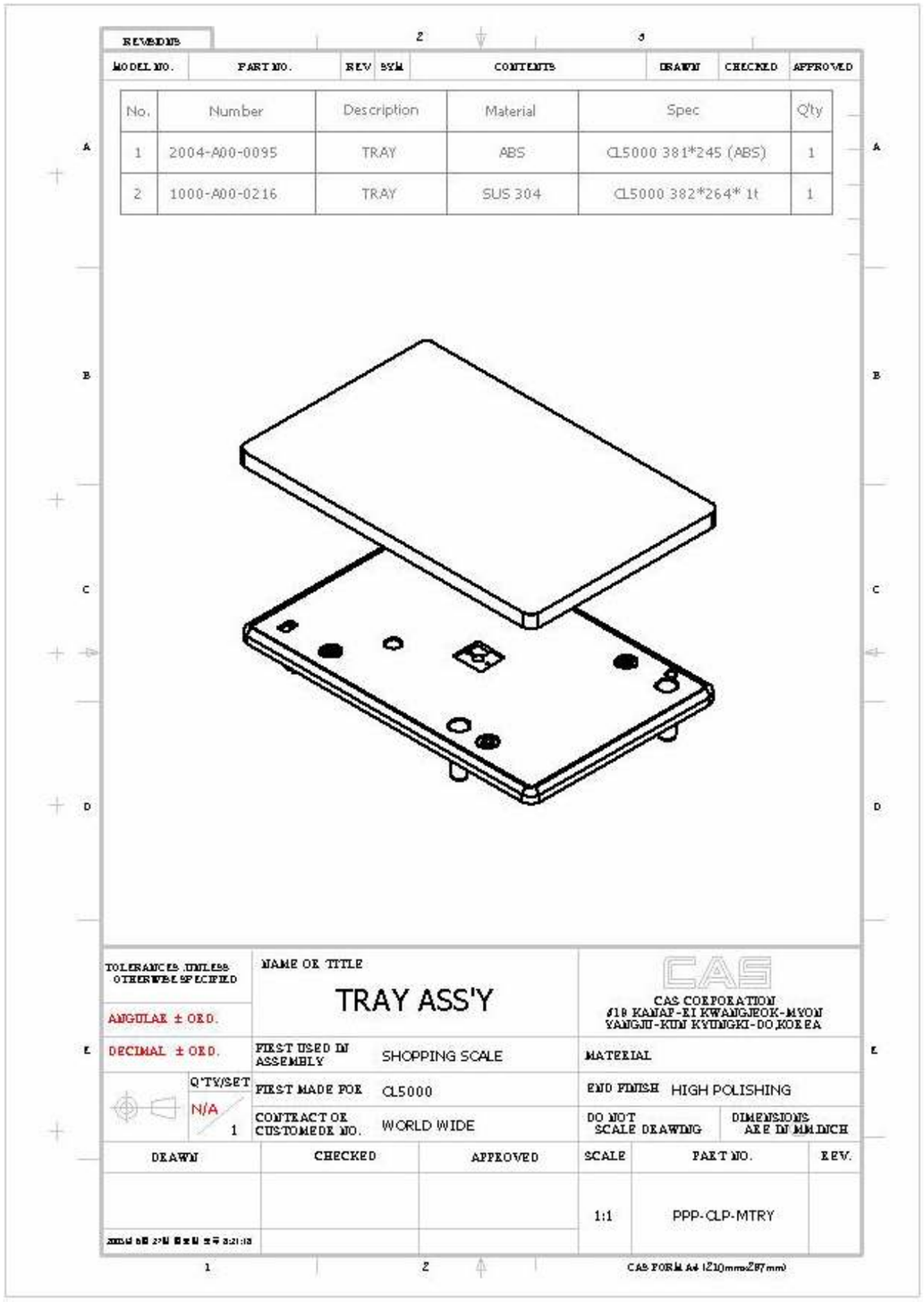

(H-type)

MODEL NO.	PART NO.	REVISIONS REV	SYM	CONTENTS	DRAWN	CHECKED	APPROVED

No.	Number	Description	Material	Spec	Q'ty
1	1000-A00-0230	TRAY GUIDE	SUS303	CL5000-H 10*20*463*1t	1
2	1000-A00-0231	TRAY LOWER HOLDER	SUS 303	CL5000-H 313*30*3t	1
3	1000-A00-0232	TRAY UPPER HOLDER	SUS 303	CL5000-H 313*30*3t	1
4	1210-A00-0100	SHAFT STOPER PLATE	SUS 303	CL5000-H @14*32	1
5	1210-A00-0101	SHAFT SPHER	SUS 303	CL5000-H @16*14	1
6		SHAFT SPRING			1
7	1540-MSU-0400	NUT(HEX)	SUS	M4*0.7	4
8	1501-MSU-0412	SCREW MACHINE(FH)	SUS	M4*12	4
9		FISH TRAY			1

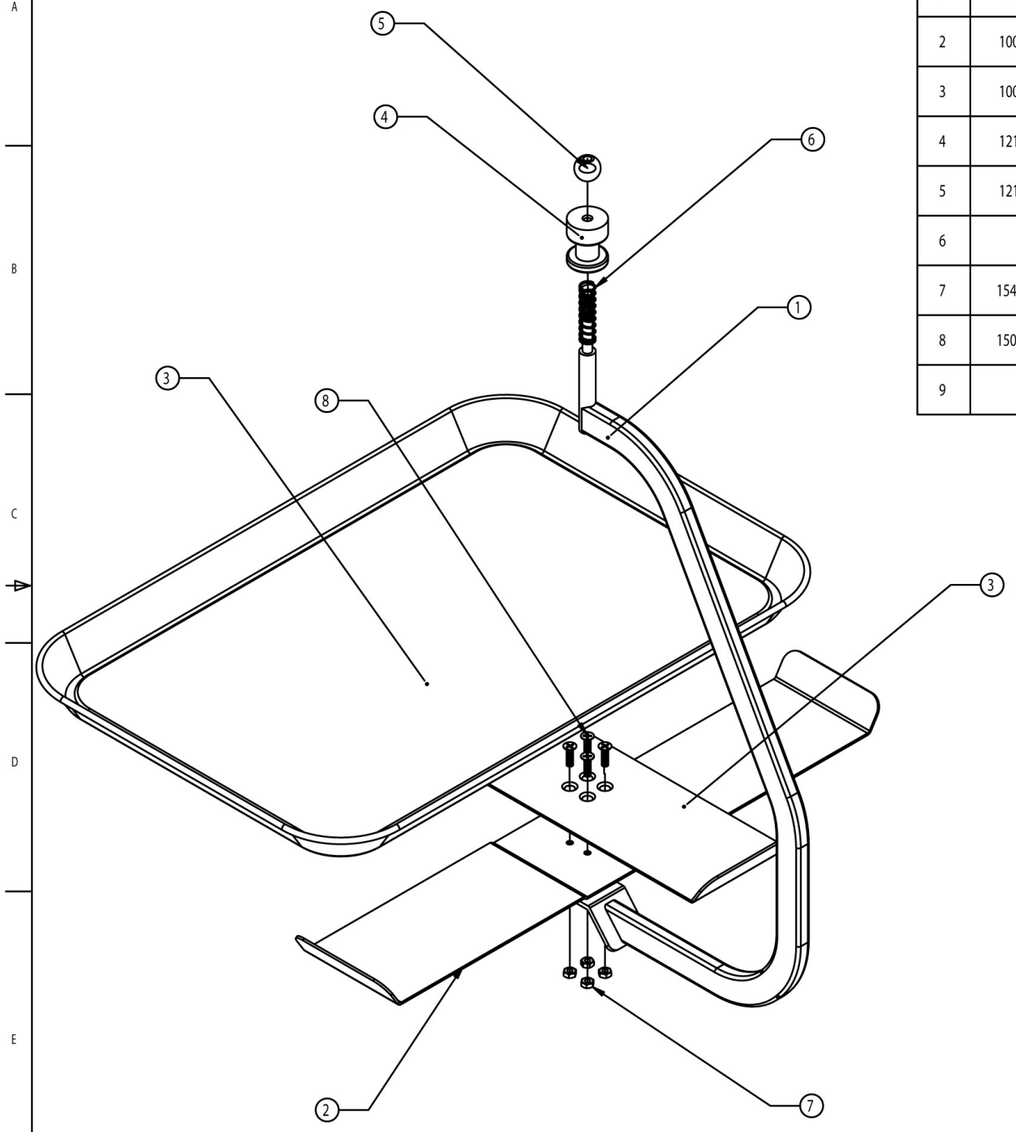

TOLERANCES .UNLESS OTHERWISE SPECIFIED	NAME OR TITLE: TRAY Ass'y	CAS CORPORATION #19 KANAP-RI KWANGJEOK-MYON YANGJU-KUN KYUNGKI-DO,KOREA	
ANGULAR ±¾ ORD.			
DECIMAL .±¾ ORD.	FIRST USED IN ASSEMBLY: SHOPPING SCALE	MATERIAL: SUS 430	
Q'TY/SET 1/1	FIRST MADE FOR: CL5000-H	END FINISH: N/A	
	CONTRACT OR CUSTOMEDR NO.: WORLD WIDE	DO NOT SCALE DRAWING	DIMENSIONS ARE IN MM.INCH

DRAWN	CHECKED	APPROVED	SCALE	PART NO.	REV.
			1:1	PPP-CLH-MTRY	0

CAS FORM A3 (297mmx420mm)

10.9 Lan card

MODEL NO.	PART NO.	REVISIONS REV	SYM	CONTENTS	DRAWN	CHECKED	APPROVED

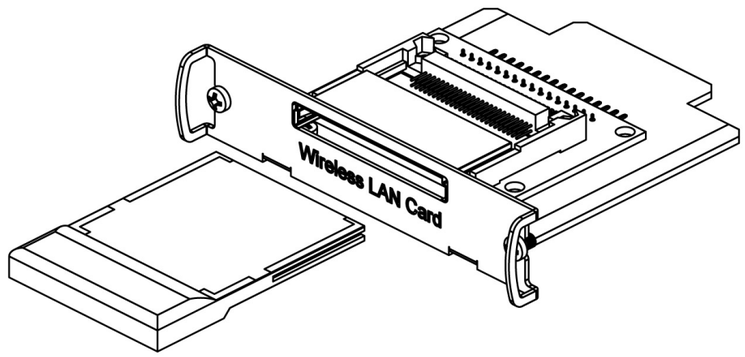

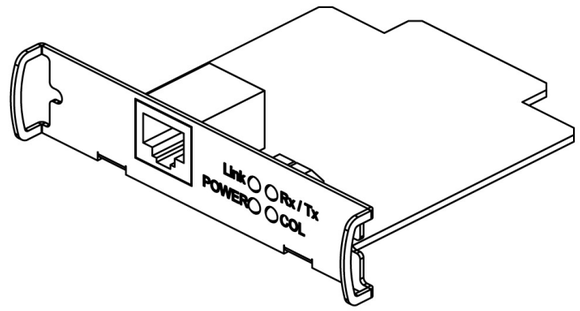

TOLERANCES .UNLESS OTHERWISE SPECIFIED	NAME OR TITLE	CAS CORPORATION #19 KANAP-RI KWANGJEOK-MYON YANGJU-KUN KYUNGKI-DO,KOREA
ANGULAR ¡¾ ORD.	CF CARD PCB	
DECIMAL ¡¾ ORD.	FIRST USED IN ASSEMBLY: N/A	MATERIAL: N/A
QTY/SET N/A / 1	FIRST MADE FOR: N/A	END FINISH: N/A
	CONTRACT OR CUSTOMEDR NO.: WORLD WIDE	DO NOT SCALE DRAWING; DIMENSIONS ARE IN MM,INCH

DRAWN	CHECKED	APPROVED	SCALE	PART NO.	REV.
			1:1		N/A

CAS FORM A3 (297mmx420mm)

11. Part List

11.1 Electronic
11.2 Mechnical

12. Revision

11-Mar, 2005

-. Add Sealing Method

-. Adjust Chapter number